Georgetown Charter Township

1515 Baldwin St., Jenison, MI 49428

Utilities Committee Meeting Agenda

September 12, 2016, after the Board meeting

1. Call To Order
2. Roll Call
3. Approval Of The Minutes Of The Previous Meeting
4. Review Sidewalk Snow Plowing Policy And List

   Documents:

   POLICY 2009-02.PDF

5. Review Complete Streets Report

   Documents:

   COMPLETE STREETS 2016-05-31 GEORGETOWN CHARTER TWP.PDF

6. Review Environmental K-9 Report, As Referred By The Township Board

   Documents:

   ENVIRONMENTAL K9 SERVICES - MAPLEWOOD LAKE REPORT 08012016B.PDF

   6.I. Sanitary Sewer

   Documents:

   SUGGESTED ADDITIONS TO SANITARY SEWER SYSTEM 09122016.PDF

7. Discuss 8th Ave. Park And Senior Center Signs On Chicago Dr.
8. Discuss Cottonwood Improvements
9. Discuss Pathways In The Township

   Note that the attachment includes a prospective list IN NO PARTICULAR ORDER.

   Documents:

   TOP 10 LIST OF SIDEWALKS AND PATHS FOR UTILITIES.PDF

10. Sidewalk Waiver Request For 6555 Center Industrial Dr.

    Motion: To recommend to the Township Board to the sidewalk waiver request for 6555 Center Industrial Dr.

    Documents:

    APPLICATION FOR SIDEWALK WAIVER.PDF
    PONSTEIN SITE PLAN FOR SIDEWALK WAIVER.PDF
    BOARD WAIVED SIDEWALKS IN PART OF INDUSTRIAL PARK.PDF

11. Discuss Property Maintenance Issues

12. Communications, Letters And Reports

13. Public Comment

14. Other Business

Policy 2009-02
Georgetown Charter Township
Snowplowing of Sidewalks by the Township
Adopted August 24, 2009 with motion #090824-09

STATEMENT OF POLICY:

It is the policy of Georgetown Charter Township to snowplow sidewalks adjacent to certain streets as designated by the Georgetown Township Board as listed in this policy adopted by the Township Board on August 24, 2009.

IMPLEMENTATION

The list of sidewalks to be snowplowed may be amended from time to time by Township Board resolution.

CRITERIA

The sidewalks adjacent to the following streets are to be plowed by Georgetown Charter Township as stated in this policy:

- Baldwin St (from 48th Ave to Cottonwood Dr)
- Bauer Rd (from 24th Ave to 20th Ave and Meadowbrook Dr to Cottonwood Dr)
- Cottonwood Dr (from Bauer Rd to Baldwin St)
- Port Sheldon St (from 40th Ave to Center Industrial Dr and 14th Ave to 8th Ave)
- Rosewood St (from Rolling Hills Dr to Chicago Dr)
- 12th Ave (from Baldwin St to Port Sheldon St)
- 14th Ave (from Port Sheldon St to Carol Dr)
- 20th Ave (from Bauer Rd to Rosewood St)
- 28th Ave (from Baldwin St to Port Sheldon St)
- 40th Ave (from Baldwin St to Blair St)

RESERVATION

Although the Township may snowplow certain sidewalks, this policy **IN NO WAY** relieves the occupant or owner of any lot or premises adjoining any street within Georgetown Township of the responsibility to clear all ice and snow from sidewalks adjoining any street as stipulated in Sec. 10-220 of the Georgetown Township Code of Ordinances.

Georgetown Township Code of Ordinances:

Sec. 10-220. Sidewalks to be cleared.
The occupant of every lot or premises adjoining any street, or the owner of such lot or premises, if the same are not occupied, shall clear all ice and snow from sidewalks adjoining any street, or the owner of such lot or premises, if the same are not occupied, shall clear all ice and snow from sidewalks adjoining such lot or premises within the time herein required. When any snow or ice shall cease to fall during the daylight hours, such snow or ice shall be cleared from the sidewalks within 24 hours after such cessation. When a fall or snow or ice shall have ceased during the nighttime, it shall be cleared from sidewalks by 6:00 p.m. of the day following.

Complete Streets

Georgetown Charter Township

May 31, 2016

P&N Project # 2150232

COMPLETE STREETS NETWORK

Based on discussions with Georgetown Charter Township, the desire of the Township is to utilize the **Complete Streets** concept without constraints of existing site conditions.

This document gives **guidance for complete street improvements for future projects** throughout the Township. The improved network provides more connectivity to the destinations in the Township. Individual roadway information, a color coded map, and costs estimates are presented to display the details of each roadway.

The main streets of the Township have been reviewed, analyzed, and considered for improvements for design, ADA, and operation. Traffic, usage, destinations, and environmental issues have helped determine the recommended improvements. **This Guide is meant to be a resource to determine what complete street improvements should be made to a roadway as future funding becomes available.** Future development definitely plays a factor in altering these recommendations as time goes on. This Complete Streets Guide is a working document as changes and developments occur within the area.

Future roadways in Georgetown Charter Township will be considered on a case by case basis for design and operation with all users in mind including bicyclists, transit vehicles and riders, and pedestrians of all ages and abilities for a **complete streets** concept.

The guiding principle for **complete streets** is to create roadways and related infrastructure that provide safe travel for all users, while each complete street has to be customized to the characteristics of the area the street serves. Complete Streets also accommodate the needs and expectations of the travelers who want to access or pass through the surrounding neighborhood, community, or region. Complete streets are those designed and operated to enable safe access and travel for all users. Pedestrians, bicyclists, motorists, transit users, and travelers of all ages and abilities will be able to move along the street network safely. The Americans with Disabilities Act (ADA) addresses the barriers and improvements needed to ensure disabled access within the public rights-of-way. The Americans with Disabilities Act further supports the concept of Complete Streets in making roadways usable for all.

Street design and traffic engineering for many years was all about moving cars and trucks from their origins to their destinations. Engineers and planners did not give much thought to pedestrians and bicyclists. Concentrating solely on vehicular traffic fails to meet the travel needs of many within the community.

According to the National Complete Streets Coalition, complete street elements to consider:

- sidewalks
- bicycle lanes and wide paved shoulders
- shared-use paths
- designated bus lanes
- safe and accessible transit stops
- crossings for pedestrians (median islands, accessible pedestrian signals, and ADA ramps)

Designs for a complete street in a rural area will look quite different from one in an urban area. For example, a complete street in a rural area could involve providing wide shoulders or a separate multi-use path instead of sidewalks.

Connecting Attractors and Generators

The main purpose of creating a multi-model transportation network is to encourage people to travel by all available transportation modes as a result and become healthier in the process. There are many destinations that we travel to on an occasional or daily basis. Typically, these trips are generated from residential areas with destinations for work, school, to run errands, or visit with friends. Trip attractors are the places that we go to that are the destination of our trip. The bicycle and pedestrian networks are designed to connect the trip generators and attractors.

There are numerous attractors of bicycle and pedestrian traffic within the study area of Georgetown Charter Township. These include many parks, lakes, playgrounds, soccer fields, employment centers, shopping stores, schools, libraries, and other recreational facilities.

Local streets become attractive to bicyclists, joggers, and walkers with opportunities to travel to recreation areas, school, work, and shopping. This first step of increasing bicycling and walking activity on local roadways can greatly enhance the quality of life as well as ultimately increase the value of properties in the Township.

Promoting a healthy and safe environment to incorporate exercise into daily life is very important. This will change how we perceive transportation, and in particular for bicycling and walking.

Why Develop Complete Streets?

- ***HEALTHIER & INCLUSIVE COMMUNITY***
  Promotion of healthy exercise through walking and biking, accessibility for all users, and non-polluting transportation;

- ***ENHANCE QUALITY OF LIFE***
  A vision of bicycling and walking to elevate the importance of alternative transportation modes to connect lakes, communities, schools, parks, neighborhoods and commercial districts as part of the planning and development process;

- ***EXPAND THE NETWORK***
  Complete Street improvement projects for a connected non-motorized environment; and

- ***MAXIMIZE FUNDING SOURCES***
  A competitive edge for the Township to secure funding. Many grant providers prefer to award monies to local jurisdictions that have a well-developed planning process for selecting their projects.

Benefits of Bicycling and Walking

Bicycling and walking are active, healthy, non-polluting, traffic reducing, and fun forms of transportation that can be a family activity and include people of all ages. Increased levels of walking and bicycling can help to alleviate some of the negative effects of population growth, including traffic congestion, air pollution, energy consumption, noise pollution, and degradation of the environment.

The increasing public health concern over obesity has put bike-able and walkable communities on the forefront of planning. A preponderance of evidence supports the link of physical activity and obesity with diabetes, heart disease, and stroke. Increased physical activity on a regular basis can lower risks of developing coronary heart disease, stroke, high blood pressure, and colon cancer.

Why Bike?

- *Bicycling offers a great alternative to driving for trips of three miles or less. This includes trips for work, school, shopping, and recreation. A convenient and safe network of bicycle facilities will help make bicycling more attractive for these short trips.*

- *The social, health, and economic benefits of bicycling are particularly valuable to commuters. Encouraging commuters to bicycle to work and children to bike to school will provide them with healthy, enjoyable exercise while addressing the problems of vehicular congestion, fuel consumption, and rising transportation costs.*

Bicycle Network

There is a great potential for bicycling trips because of the relaxed atmosphere we enjoy during the summer, close proximity to many destinations in and around Georgetown Charter Township, and the many parks, waterways, and rural areas that offer great recreational cycling.

Bicycle trip purposes can generally be broken down into a few different types of users and trips.

- Recreational bicyclist may be more interested in the routes leading to parks or other areas of interest.
- Casual recreational bicyclists prefer scenic, winding, off-street trails.
- Experienced bicyclists/racers prefer to share the roadway.

Bikeway projects are developed to:

- Meet the needs of a variety of bicyclist types from experienced to casual riders; and
- Provide connectivity to key destinations.

Why Walk?

- *Walking is the most basic form and lowest cost of transportation.*
- *A complete pedestrian network of sidewalks, walkways, and trails provides an additional mobility option for residents of Georgetown Charter Township and visitors to the area.*
- *Individuals will be encouraged to walk as the convenience of walking increases. Consequently, individuals then will lead more active and healthy lives in a more safe and attractive environment.*

Pedestrian

A pedestrian network provides safe and convenient access for all users. Facilities must meet the needs of pedestrians of all mobility abilities as well as accommodate other roadway users such as motorists, bicyclists, and transit vehicles.

Recommended pedestrian improvements include:

- Construction of multi-use trails that provide recreational opportunities as well as connections to schools and employment.
- Widened shoulders to accommodate both bicyclists and pedestrians on rural roads.
- Way-finding signing to help pedestrians locate the route.

Complete Streets Guide

This Complete Streets Guide includes a Layout Map that has been developed taking into account:

- Connectivity
- Logical/shortest paths to key destinations
- Address safety concerns
- Address constructability issues

The streets of the Township have been reviewed, analyzed, and considered for improvements for design, ADA, and operation. Traffic, usage, destinations, and environmental issues have helped determine the recommended improvements. **This Guide is meant to be a resource to determine what complete street improvements should be made to a roadway as future funding becomes available.** Future development definitely plays a factor in altering these recommendations as time goes on. This Complete Streets Guide is a working document as changes and developments occur within the area.

The Township streets and roadways have been discussed, scoped for buildability issues, and cost estimated. Cross-sections have been developed to assist with implementation of the improvements.

Estimates & Cross Sections

The construction estimates prepared for this report assume 4-foot-wide shoulders/paths with 14-foot-wide timber boardwalks. These dimensions are the minimum recommended by the American Association of State Transportation and Highway Officials (AASHTO) for a non-motorized path. These are typically the standard widths that will be required if your project is funded with and State or Federal grant money. A separated 10' wide non-motorized path is not always feasible within existing road right-of-way and with future maintenance funding. Purchase of right-of-way for separated pathways is sometimes prohibitive due to funding constraints. In cases where the opportunity is observed, it has been noted.

Please note that the estimates provided are for construction only. Engineering fees for shoulder/path projects are typically in the range of 5 - 8% of construction cost for Design Engineering and 8 - 11% of construction costs for Construction Engineering; these fees are dependent on the size of the project or how the project is funded. For example, if a project is funded with State or Federal monies, these projects often have more approval steps, more construction administration requirements and audits for project closeouts. In addition, the Township should realize that when easements or land acquisition is required, these costs will often have to be considered for each project and often add a year ± to the schedule.

Funding

The design and construction of bicycle and pedestrian facilities are eligible to receive funding through core Federal highway funding categories, such as the Surface Transportation Program, the National Highway System, and the Highway Bridge Program.

Safe Routes to School

Another potential source of funding that stood out as a possibility for your community is the Safe Routes to School Grant. The Federal Safe Routes to School program encourages students from kindergarten through 8th grade to walk or bike to and from their schools. Not only does the program promote exercise in students' daily lives, it also reduces the need for parents to drive their children and the resulting traffic congestion on streets around schools in the mornings and afternoons. FHWA provides Federal funds through a competitive grant process, to support educational, safety, and other programs and to pay for infrastructure improvements.

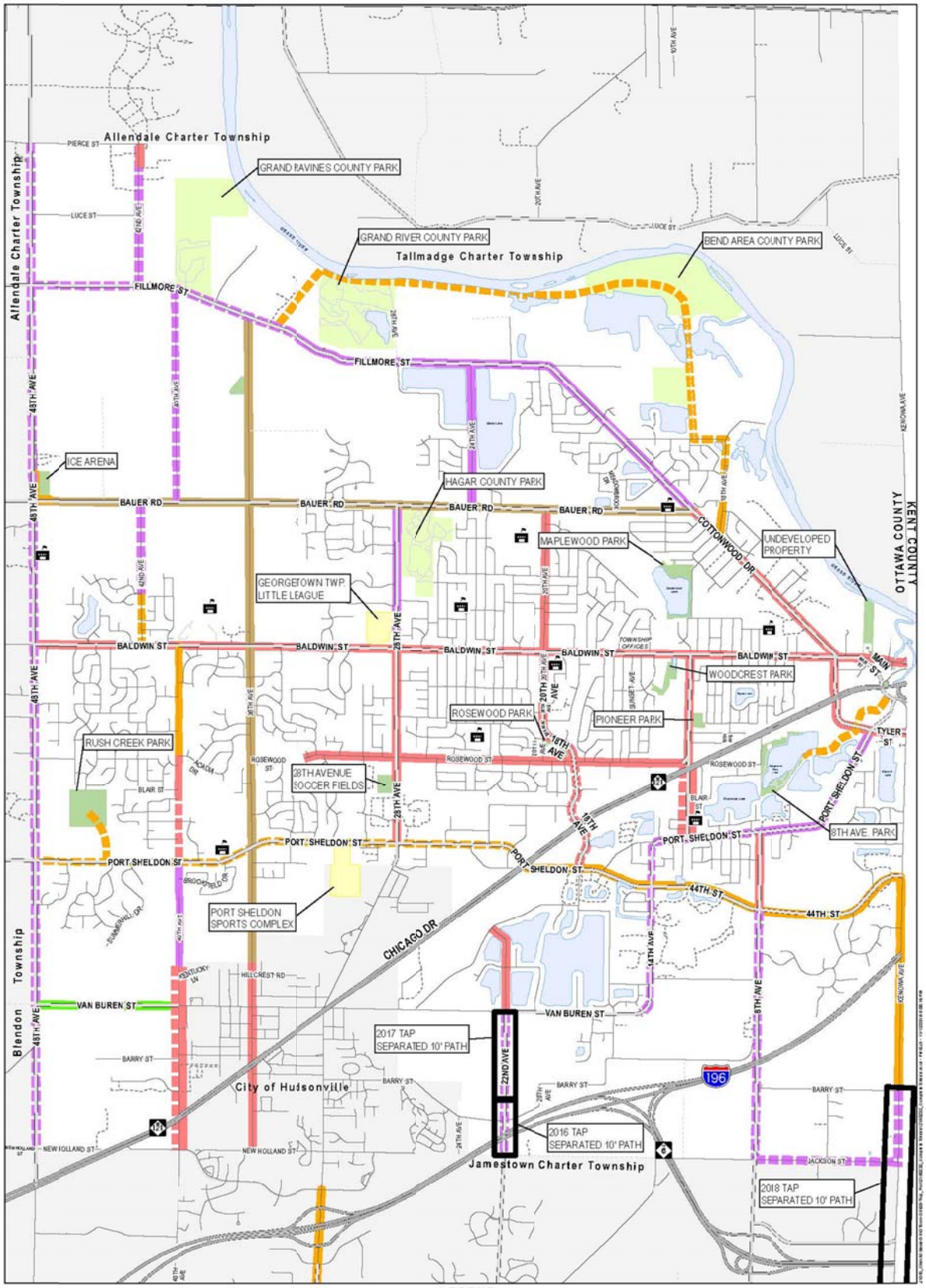
Allendale Charter Township
GRAND RAVINES COUNTY PARK
GRAND RIVER COUNTY PARK
Tallmadge Charter Township
BEND AREA COUNTY PARK
FILLMORE ST
ICE ARENA
HAGAR COUNTY PARK
BAUER RD
MAPLEWOOD PARK
UNDEVELOPED PROPERTY
COTTONWOOD DR
OTTAWA COUNTY
KENT COUNTY
GEORGETOWN TWP. LITTLE LEAGUE
BALDWIN ST
WOODCREST PARK
ROSEWOOD PARK
PIONEER PARK
RUSH CREEK PARK
28TH AVENUE SOCCER FIELDS
ROSEWOOD ST
PORT SHELDON ST
8TH AVE. PARK
PORT SHELDON SPORTS COMPLEX
CHICAGO DR
44TH ST
VAN BUREN ST
2017 TAP SEPARATED 10' PATH
City of Hudsonville
BARRY ST
2016 TAP SEPARATED 10' PATH
Jamestown Charter Township
NEW HOLLAND ST
2018 TAP SEPARATED 10' PATH
Blendon Township
LEGEND
Proposed Connector
Existing Non-Motorized Trail
Proposed Non-Motorized Trail
Existing Paved Shouder for Bicycles
Proposed Paved Shoulder for Bicycles
Existing Sidewalk
Proposed Sidewalk
Shared Road
Public Schools
Georgetown Twp. Parks
Ottawa County Parks
Other Recreation Facility
0 0.5 1 Miles
GEORGETOWN CHARTER TOWNSHIP
OTTAWA COUNTY, MICHIGAN
COMPLETE STREETS MAP
Prein&Newhof

Georgetown Charter Township

East –West Roads

Fillmore Street, *48th Avenue to Cottonwood/East of 24th*

C **D**

- 48th through the hills
  - Proposed Shoulder Widening for Bicyclists
    - Width is good even through guardrail sections

- Hills to Cottonwood
  - Existing Paved Shoulders for Bicyclists
  - 28th to 24th also has sidewalk on the south side through lake residential area

To Do:

Radius in the NE quadrant of 24th needs to be improved.

Fillmore Street, 48th Avenue to Cottonwood/east of 24th - 3.7 miles				
Description	Quantity	Unit	Unit Price	Item Price
HMA	2900	Ton	$100.00	$290,000.00
Shoulder, 3 inch	8700	Syd	$2.00	$17,400.00
Aggregate Base, 6 inch	28500	Syd	$5.00	$142,500.00
Subbase, CIP	30000	Cyd	$8.00	$240,000.00
Embankment, CIP	3000	Cyd	$4.50	$13,500.00
Excavation, Earth	11000	Cyd	$5.00	$55,000.00
Slope Restoration	44000	Syd	$1.50	$66,000.00
Miscellaneous	1	LS	$42,000.00	$42,000.00
			Total	**$866,400.00**

Considerations:

@Consumers Utility Line

-Future connectivity via non-roadway trails

-Grand Ravines County Park

Fillmore Street, *48th Avenue to Cottonwood/East of 24th (Photos)*

Cottonwood Drive, *Fillmore Street to Port Sheldon Street*

- Fillmore Street to Bauer Road
  - Existing Wide Paved Shoulders for Bicyclist
    - Poor Condition
    - **Rehabilitate/Re-Pave Road and Shoulders**

- Bauer Road to Port Sheldon Street
  - Existing Sidewalks
    - Install ADA Ramps
    - **Replace miscellaneous sections of sidewalk**

Cottonwood Drive, Fillmore Street to Port Sheldon Street				
Description	Quantity	Unit	Unit Price	Item Price
HMA	1200	Ton	$100.00	$120,000.00
Aggregate Base, 6 inch	11000	Syd	$5.00	$55,000.00
Subbase, CIP	5500	Cyd	$8.00	$44,000.00
Sidewalk, Conc, 4 inch	1000	Sft	$4.00	$4,000.00
Sidewalk Ramp, Conc, 6 inch	3000	Sft	$7.00	$21,000.00
Detectable Warning Surface	200	Ft	$45.00	$9,000.00
Shoulder, 3 inch	3500	Syd	$2.00	$7,000.00
Embankment, CIP	1400	Cyd	$4.50	$6,300.00
Excavation, Earth	4000	Cyd	$5.00	$20,000.00
Slope Restoration	12000	Syd	$1.50	$18,000.00
Miscellaneous	1	LS	$45,000.00	$45,000.00
			Total	**$349,300.00**

Considerations:

@Baldwin Street

-Enhancing pedestrian crossings with stamped inlay

-Traffic calming measures

-Potential Roundabout

-Raised landscape medians within turn lanes

Cottonwood Drive, *Fillmore Street to Port Sheldon (Photos)*

Bauer Road, *48th Avenue to Cottonwood Drive*

B

- 48th Avenue to Cottonwood Drive
  - Proposed Shoulder Widening, Curb and Gutter and Sidewalks

To Do:

ROW acquisition
Utility Relocation

Bauer Road, 48th Avenue to Cottonwood Drive - 4.5 miles				
Description	Quantity	Unit	Unit Price	Item Price
HMA	15000	Ton	$100.00	$1,500,000.00
Curb and Gutter	48000	Ft	$18.00	$864,000.00
Aggregate Base, 6 inch	90750	Syd	$5.00	$453,750.00
Subbase, CIP	48000	Cyd	$8.00	$384,000.00
Sidewalk, Conc, 4 inch	10000	Sft	$4.00	$40,000.00
Sidewalk Ramp, Conc, 6 inch	1200	Sft	$7.00	$8,400.00
Detectable Warning Surface	150	Ft	$45.00	$6,750.00
Embankment, CIP	15000	Cyd	$4.50	$67,500.00
Excavation, Earth	45000	Cyd	$5.00	$225,000.00
Slope Restoration	30000	Syd	$1.50	$45,000.00
Miscellaneous	1	LS	$180,000.00	$180,000.00
ROW acquisitions and Utility Relocations are to be considered 3 years prior to project initiation				
			Total	**$3,774,400.00**

Considerations:

@Consumers Utility Line
-Future connectivity via non-roadway trails
Grant funding – Bauerwood Elementary eligible
-Safe Routes to Schools (SR2S)

Bauer Road, *48th Avenue to Cottonwood Drive (Photos)*

Baldwin Street, *48th Avenue to Cottonwood Drive*

- 48th Avenue to Cottonwood Drive
  - Existing Sidewalk
    - **Needs ADA ramps** everywhere
    - No sidewalk between Goodwill and Main and near Walgreens

To Do:

Pedestrian Countdown signals not operating
Delineate crosswalks with inlay or pavement marking
Signing needed for schools and crosswalks
Need curb cut at the School entrance
Repave the asphalt trail at the School

Baldwin Street, 48th Avenue to Cottonwood Drive - 5.58 miles				
Description	Quantity	Unit	Unit Price	Item Price
Subbase, CIP	200	Cyd	$8.00	$1,600.00
Sidewalk, Rem	1600	Syd	$5.50	$8,800.00
Sidewalk, Conc, 4 inch	4000	Sft	$4.00	$16,000.00
Sidewalk Ramp, Conc, 6 inch	10000	Sft	$7.00	$70,000.00
Detectable Warning Surface	700	Ft	$45.00	$31,500.00
Slope Restoration	600	Syd	$1.50	$900.00
Miscellaneous	1	LS	$26,000.00	$26,000.00
			Total	**$154,800.00**

Considerations:

@Cottonwood Drive area

-Enhancing pedestrian crossings with stamped inlay

-Traffic calming measures

-Potential Roundabout

-Raised landscape medians within turn lanes

Baldwin Street, *48th Avenue to Cottonwood Drive (Photos)*

Rosewood Street, *East of 28th Avenue to 12th Avenue*

D

- East of 28th Avenue to 12th Avenue*
  - Existing Sidewalk
    - **Need ADA ramps** in 42 quadrants

- Sunset Avenue to 12th Avenue (South Side Only*)
  - Proposed Paved Shoulder for Bicycles (2000')
    - Wet low-land area

Rosewood Street, East of 28th Avenue to 12th Avenue - 2.56 miles				
Description	Quantity	Unit	Unit Price	Item Price
Clearing	8	Sta	$150.00	$1,200.00
HMA	200	Ton	$100.00	$20,000.00
Aggregate Base, 6 inch	1500	Syd	$5.00	$7,500.00
Subbase, CIP	750	Cyd	$8.00	$6,000.00
Sidewalk, Rem	4200	Syd	$5.50	$23,100.00
Sidewalk, Conc, 4 inch	1000	Sft	$4.00	$4,000.00
Sidewalk Ramp, Conc, 6 inch	3200	Sft	$7.00	$22,400.00
Detectable Warning Surface	250	Ft	$45.00	$11,250.00
Shoulder, 3 inch	500	Syd	$2.00	$1,000.00
Embankment, CIP	600	Cyd	$4.50	$2,700.00
Excavation, Earth	500	Cyd	$5.00	$2,500.00
Slope Restoration	2500	Syd	$1.50	$3,750.00
Miscellaneous	1	LS	$21,000.00	$21,000.00
			Total	**$125,200.00**

Considerations:

Grant funding

-Safe Routes to Schools (SR2S)

Rosewood Street, *East of 28th Avenue to 12th Avenue (Photos)*

Port Sheldon Street, *48th Avenue to 14th Avenue*

A

- 48th to M-121/Chicago Drive
  - Proposed Non-Motorized Trail
- M-121/Chicago Drive to 14th Avenue/44th Street
  - Existing Non-Motorized Trail
  -

Port Sheldon Street, M-121 to 48th Avenue - 3.4 miles				
Description	Quantity	Unit	Unit Price	Item Price
HMA	3300	Ton	$100.00	$330,000.00
Aggregate Base, 6 inch	24000	Syd	$5.00	$120,000.00
Subbase, CIP	9000	Cyd	$8.00	$72,000.00
Sidewalk, Rem	10000	Syd	$5.50	$55,000.00
Detectable Warning Surface	100	Ft	$45.00	$4,500.00
Slope Restoration	8000	Syd	$1.50	$12,000.00
Miscellaneous	1	LS	$30,000.00	$30,000.00
			Total	**$623,500.00**

Port Sheldon Street, *14th Avenue to Cottonwood Drive*

C **D**

- 14th Avenue/44th Street to 8th Avenue
  - Existing Sidewalk
    - **Install ADA Ramps**
- 8th Avenue to Cottonwood Drive
  - Proposed Shoulder Widening for Bicyclists

Port Sheldon Street, 14th Avenue/44th Street to Cottonwood Drive - 1.9 miles				
Description	Quantity	Unit	Unit Price	Item Price
Subbase, CIP	50	Cyd	$8.00	$400.00
Sidewalk, Rem	250	Syd	$5.50	$1,375.00
Sidewalk, Conc, 4 inch	150	Sft	$4.00	$600.00
Sidewalk Ramp, Conc, 6 inch	1700	Sft	$7.00	$11,900.00
Detectable Warning Surface	125	Ft	$45.00	$5,625.00
Slope Restoration	200	Syd	$1.50	$300.00
Miscellaneous	1	LS	$4,000.00	$4,000.00
			Total	**$24,200.00**

Port Sheldon Street, *48th Avenue to Cottonwood Drive (Photos)*

44th Street, *14th Avenue to Kenowa Avenue*

- 14th Avenue/44th Street to Kenowa Avenue
  - Existing Non-Motorized Trail
    - Nice pathway
    - Well used

44th Street, 14th Avenue to Kenowa Avenue				
Description	Quantity	Unit	Unit Price	Item Price
Subbase, CIP	50	Cyd	$8.00	$400.00
Sidewalk, Rem	150	Syd	$5.50	$825.00
Sidewalk, Conc, 4 inch	500	Sft	$4.00	$2,000.00
Sidewalk Ramp, Conc, 6 inch	750	Sft	$7.00	$5,250.00
Detectable Warning Surface	60	Ft	$45.00	$2,700.00
Slope Restoration	200	Syd	$1.50	$300.00
Miscellaneous	1	LS	$10,000.00	$10,000.00
			Total	**$21,475.00**

44th Street, *14th Avenue to Kenowa Avenue (Photos)*

VanBuren Street, *48th Avenue to 40th Avenue*

- 48th Avenue to 40th Avenue
  - Shared Use Roadway
    - Steep Slopes & Guardrail sections
    - Hills
    - Ditches

VanBuren Street, 48th Avenue to 40th Avenue - 1.0 miles				
Description	Quantity	Unit	Unit Price	Item Price
HMA	800	Ton	$100.00	$80,000.00
Aggregate Base, 6 inch	8000	Syd	$5.00	$40,000.00
Subbase, CIP	4000	Cyd	$8.00	$32,000.00
Shoulder, 3 inch	5000	Syd	$2.00	$10,000.00
Embankment, CIP	2500	Cyd	$4.50	$11,250.00
Excavation, Earth	3000	Cyd	$5.00	$15,000.00
Slope Restoration	14000	Syd	$1.50	$21,000.00
Miscellaneous	1	LS	$32,000.00	$32,000.00
			Total	**$241,250.00**

VanBuren Street, *48th Avenue to 40th Avenue (Photos)*

Jackson Street, *8th Avenue to Kenowa Avenue*

C **D**

- 8th Avenue to Kenowa Avenue
  - Proposed Shoulder Widening for Bicyclists
    - Width is fine through guardrail section

Jackson Street, 8th Avenue to Kenowa Avenue - 1.0 miles				
Description	Quantity	Unit	Unit Price	Item Price
HMA	800	Ton	$100.00	$80,000.00
Aggregate Base, 6 inch	8000	Syd	$5.00	$40,000.00
Subbase, CIP	4000	Cyd	$8.00	$32,000.00
Shoulder, 3 inch	2400	Syd	$2.00	$4,800.00
Embankment, CIP	3000	Cyd	$4.50	$13,500.00
Excavation, Earth	4000	Cyd	$5.00	$20,000.00
Slope Restoration	12000	Syd	$1.50	$18,000.00
Miscellaneous	1	LS	$32,000.00	$32,000.00
			Total	**$240,300.00**

Jackson Street, *8th Avenue to Kenowa Avenue (Photos)*

Georgetown Charter Township

North – South Roads

48th Avenue, *New Holland Street to Pierce Street*

C **D**

- New Holland Street to Pierce Street
  - Proposed Shoulder Widening for Bicyclists

To Do:

Pave to the face of the guardrail at the bridge north of Port Sheldon Street
Enclose approx. 400' of ditch north of Port Sheldon Street. May need permits.
Install approx. 200' of retaining wall at hill.
Stabilize radius at New Holland. NorthWest Quadrant.
SCHOOL pavement markings and signing @ Bauer Elementary.

Pros: Width is good. No impediments. Rural. Campus. Bike Traffic.

Cons: Difficult to designate the bike lane area on west side of the road coming south with all of the widened intersections and lane tapers.

48th Avenue, New Holland Street to Pierce Street - 7.0 miles				
Description	Quantity	Unit	Unit Price	Item Price
HMA	5425	Ton	$100.00	$542,500.00
Shoulder, 3 inch	16500	Syd	$2.00	$33,000.00
Aggregate Base, 6 inch	53500	Syd	$5.00	$267,500.00
Subbase, CIP	27400	Cyd	$8.00	$219,200.00
Embankment, CIP	11000	Cyd	$4.50	$49,500.00
Excavation, Earth	42250	Cyd	$5.00	$211,250.00
Culvert Extension	1	Ft	$5,000.00	$5,000.00
Slope Restoration	82000	Syd	$1.50	$123,000.00
Retaining Wall	1	LS	$6,500.00	$6,500.00
Work on 48th Ave. and New Holland St. NW Quadrant	1	LS	$5,000.00	$5,000.00
Miscellaneous	1	LS	$73,000.00	$73,000.00
			Total	**$1,535,450.00**

Considerations:

Boardwalk at Bridge near Port Sheldon Street
Both sides or cross non-motorized traffic over
Connect Ice Arena pathway to Consumers Utility Line
-Future connectivity via non-roadway trails
Grant funding – Bauer Elementary eligible
-Safe Routes to Schools (SR2S)

48th Avenue, *New Holland Street to Pierce Street (Photos)*

At Bauer Road

Bridge north of Port Sheldon Street

Near Bauer Elementary School

Hill south of VanBuren Street

42nd Avenue, *Baldwin Street to Bauer Road*

A **C** **D**

- Baldwin Street to Meadowwood Drive
  - Proposed Non-Motorized Trail
    - Constructable on either west or east side.

- Meadowwood Drive to Bauer Road (3,400')
  - Proposed Paved Shoulder for Bicycles

Pros:
Nicely connects to the wide paved shoulders on Bauer Road to the north and to the school on Baldwin Street.

Existing box culvert is already new, long enough, and in great shape. (500' south of Bauer)

To Do: Fill in ditch at north end with an enclosed storm sewer if ever developed.

42nd Avenue, Baldwin Street to Bauer Road - 1.0 miles				
Description	Quantity	Unit	Unit Price	Item Price
HMA	850	Ton	$100.00	$85,000.00
Shoulder, 3 inch	1600	Syd	$2.00	$3,200.00
Aggregate Base, 6 inch	7650	Syd	$5.00	$38,250.00
Subbase, CIP	3500	Cyd	$8.00	$28,000.00
Embankment, CIP	1300	Cyd	$4.50	$5,850.00
Excavation, Earth	6625	Cyd	$5.00	$33,125.00
Slope Restoration	10000	Syd	$1.50	$15,000.00
Miscellaneous	1	LS	$31,000.00	$31,000.00
			Total	**$239,425.00**

42nd Avenue, *Baldwin Street to Bauer Road (Photos)*

Typical shoulder section with ditch

Typical shoulder section

42nd Avenue, *Fillmore Street to Pierce Street*

A **C** **D**

- Fillmore Street to Pierce Street
  - Proposed Shoulder Widening for Bicyclists
    - No Right-of-Way (ROW) needed

  - Alternate: Proposed Non-Motorized Trail
    - Right of Way (ROW) would be needed
    - Enclose the ditch and collect drainage

  - Existing Sidewalk at north end by Pierce

42nd Avenue, Fillmore Street to Pierce Street - 1.0 miles				
Description	Quantity	Unit	Unit Price	Item Price
HMA	800	Ton	$100.00	$80,000.00
Shoulder, 3 inch	2350	Syd	$2.00	$4,700.00
Aggregate Base, 6 inch	7650	Syd	$5.00	$38,250.00
Subbase, CIP	4000	Cyd	$8.00	$32,000.00
Embankment, CIP	2750	Cyd	$4.50	$12,375.00
Excavation, Earth	7200	Cyd	$5.00	$36,000.00
Slope Restoration	17000	Syd	$1.50	$25,500.00
Miscellaneous	1	LS	$34,000.00	$34,000.00
			Total	**$262,825.00**

Considerations:
Future connectivity
-Future Trail@Consumers Utility Line
-Grand Ravines County Park
-Grand Valley

42nd Avenue, *Fillmore Street to Pierce Street (Photos)*

Near Pierce Street

Grand Ravines County Park entrance

40th Avenue, *New Holland Street to Baldwin Street*

Interesting stretch of segments. City to rural to development to school. Connects schools, parks, communities, and neighborhoods.

- New Holland Street to Hudsonville City Limits (West Side ONLY)
  - Proposed Sidewalks
  - LOW PRIORITY since the city already has sidewalk to the pond on the east side near Kentucky Lane/City Limits

- Kentucky Lane/City Limits to Port Sheldon Street
  - Existing Wide Paved Shoulders for Bicyclist

- Port Sheldon Street to Baldwin Street
  - Existing and Proposed Sidewalks through neighborhoods

- Acadia to Baldwin Street
  - Existing Non-Motorized Trail

To Do:

Pedestrian Countdown signals not operating
Fill in missing segments of sidewalk (e.g. Sara to Blair)
Trail needs crack sealing and to be rejuvenated.
ADA ramps needed. Need crossings on Baldwin @ 40th to safely cross to school.
Weeding and Maintenance.

NOTE: Van Buren to pond (east side)
Existing Sidewalks (within the City of Hudsonville)

40th Avenue, New Holland Street to Baldwin Street - 3.5 miles				
Description	Quantity	Unit	Unit Price	Item Price
Trail, Preventative Maintenance	1	LS	$3,500.00	$3,500.00
Subbase, CIP	500	Cyd	$8.00	$4,000.00
Sidewalk, Conc, 4 inch	70140	Sft	$4.00	$280,560.00
Sidewalk Ramp, Conc, 6 inch	1500	Sft	$7.00	$10,500.00
Detectable Warning Surface	125	Ft	$45.00	$5,625.00
Embankment, CIP	900	Cyd	$4.50	$4,050.00
Excavation, Earth	1720	Cyd	$5.00	$8,600.00
Slope Restoration	6300	Syd	$1.50	$9,450.00
Miscellaneous	1	LS	$33,000.00	$33,000.00
			Total	**$359,285.00**

Typical shoulders

40th Avenue, *Bauer Road to Fillmore Street*

C **D**

- Bauer Road to Fillmore Street
  - Proposed Shoulder Widening for Bicyclists

To Do:

Ditch section (massive ditch) at 40th and Bauer.
Need Guardrail if we are not going to move the ditch or enclose it.

NOTE: The existing road is in poor condition. Do not do this fix until the road is reconstructed.

40th Avenue, Bauer Road to Fillmore Street - 1.5 miles				
Description	Quantity	Unit	Unit Price	Item Price
HMA	1200	Ton	$100.00	$120,000.00
Shoulder, 3 inch	1800	Syd	$2.00	$3,600.00
Aggregate Base, 6 inch	11500	Syd	$5.00	$57,500.00
Subbase, CIP	5900	Cyd	$8.00	$47,200.00
Embankment, CIP	3550	Cyd	$4.50	$15,975.00
Excavation, Earth	4400	Cyd	$5.00	$22,000.00
Slope Restoration	18000	Syd	$1.50	$27,000.00
Guardrail	400	Ft	$20.00	$8,000.00
Miscellaneous	1	LS	$30,000.00	$30,000.00
			Total	**$331,275.00**

Considerations:

@Consumers Utility Line

-Future connectivity via non-roadway trails

-Grand Ravines County Park

40th Avenue, *New Holland Street to Baldwin Street & Bauer Road to Fillmore Street*

Hudsonville

North of Bauer Road

Typical paved shoulders

Utility Lines – potential non-motorized trail

Non-Motorized Trail at Acadia

Non-Motorized Trail at Acadia

36th Avenue, *Hudsonville City Limits to Fillmore Street*

B

- Hudsonville City Limits to Fillmore Street
  - Proposed Shoulder Widening, Curb and Gutter and Sidewalks

To Do:

ROW acquisition
Utility Relocation
Extend Cross Culverts, ditch fills, possible guardrail
Pavement markings and signs
Pedestrian Signals at Port Sheldon need work

36th Avenue, Hudsonville City Limits to Fillmore Street - 3.0 miles				
Description	Quantity	Unit	Unit Price	Item Price
HMA	10000	Ton	$100.00	$1,000,000.00
Curb and Gutter	32000	Ft	$18.00	$576,000.00
Aggregate Base, 6 inch	60500	Syd	$5.00	$302,500.00
Subbase, CIP	32000	Cyd	$8.00	$256,000.00
Sidewalk, Conc, 4 inch	15000	Sft	$4.00	$60,000.00
Sidewalk Ramp, Conc, 6 inch	800	Sft	$7.00	$5,600.00
Detectable Warning Surface	100	Ft	$45.00	$4,500.00
Embankment, CIP	20000	Cyd	$4.50	$90,000.00
Excavation, Earth	36000	Cyd	$5.00	$180,000.00
Slope Restoration	36000	Syd	$1.50	$54,000.00
Miscellaneous	1	LS	$130,000.00	$130,000.00
ROW acquisitions and Utility Relocations are to be considered 3 years prior to project initiation				
			Total	**$2,658,600.00**

Considerations:

@Consumers Utility Line
-Future connectivity via non-roadway trails
Grant funding – Georgetown Elementary -Safe Routes to Schools
Accomplish Connectivity through subdivisions and schools

36th Avenue, *New Holland Street to Fillmore Street*

South of Port Sheldon Street

28th Avenue, *Baldwin Street to Bauer Road*

- Baldwin Street to Bauer Road
  - Existing Wide Paved Shoulders
    - Poor Condition
    - Rehabilitate/Re-Pave Road and Shoulders

28th Avenue, Baldwin Street to Bauer Road - 1.0 miles				
Description	Quantity	Unit	Unit Price	Item Price
HMA	800	Ton	$100.00	$80,000.00
Shoulder, 3 inch	2400	Syd	$2.00	$4,800.00
Aggregate Base, 6 inch	8000	Syd	$5.00	$40,000.00
Subbase, CIP	4000	Cyd	$8.00	$32,000.00
Embankment, CIP	1500	Cyd	$4.50	$6,750.00
Excavation, Earth	5500	Cyd	$5.00	$27,500.00
Slope Restoration	12000	Syd	$1.50	$18,000.00
Miscellaneous	1	LS	$32,000.00	$32,000.00
			Total	**$241,050.00**

28th Avenue, *Port Sheldon Street to Bauer Road (Photos)*

24th Avenue, *Bauer Road to Fillmore Street*

- Bauer Road to Fillmore Street
  - Existing Wide Paved Shoulders for Bicyclist
    - Good Condition.
    - Nothing needed.

24th Avenue, *Bauer Road to Fillmore Street (Photos)*

22nd Avenue, *South of I-196 to North of Van Buren Street*

C **D**

- South of I-196 to North of Van Buren Street
  - Proposed Shoulder Widening for Bicyclists

- Van Buren Street to north end of 22nd Avenue
  - Existing Sidewalks

22nd Avenue, South of I-196 to North of Van Buren Street - 1.0 miles				
Description	Quantity	Unit	Unit Price	Item Price
HMA	800	Ton	$100.00	$80,000.00
Shoulder, 3 inch	2400	Syd	$2.00	$4,800.00
Aggregate Base, 6 inch	8000	Syd	$5.00	$40,000.00
Subbase, CIP	4000	Cyd	$8.00	$32,000.00
Embankment, CIP	1500	Cyd	$4.50	$6,750.00
Excavation, Earth	5500	Cyd	$5.00	$27,500.00
Slope Restoration	12000	Syd	$1.50	$18,000.00
Miscellaneous	1	LS	$32,000.00	$32,000.00
			Total	**$241,050.00**

22nd Avenue, *South of I-196 to North of Van Buren Street (Photos)*

20th Avenue, *Rosewood Street to Bauer Road*

- Rosewood Street to Bauer Road
  - Existing Sidewalks
    - **Install ADA Ramps**
    - Replace miscellaneous sections of sidewalk

NOTE: The existing road is in poor condition. Do not do this fix until the road is reconstructed.

20th Avenue, Rosewood Street to Bauer Road - 1.79 miles				
Description	Quantity	Unit	Unit Price	Item Price
Sidewalk, Rem	450	Syd	$5.50	$2,475.00
Subbase, CIP	50	Cyd	$8.00	$400.00
Sidewalk, Conc, 4 inch	1750	Sft	$4.00	$7,000.00
Sidewalk Ramp, Conc, 6 inch	3000	Sft	$7.00	$21,000.00
Detectable Warning Surface	200	Ft	$45.00	$9,000.00
Slope Restoration	350	Syd	$1.50	$525.00
Miscellaneous	1	LS	$8,000.00	$8,000.00
			Total	**$48,400.00**

20th Avenue, *Rosewood Street to Bauer Road (Photos)*

18th Avenue, *Port Sheldon Street to Rosewood Street*

- Port Sheldon Street to Rosewood Street
  - Existing Sidewalks

18th Avenue, Port Sheldon Street to Rosewood Street - .80 miles				
Description	Quantity	Unit	Unit Price	Item Price
Sidewalk, Conc, 4 inch	30000	Sft	$4.00	$120,000.00
Sidewalk Ramp, Conc, 6 inch	1000	Sft	$7.00	$7,000.00
Detectable Warning Surface	75	Ft	$45.00	$3,375.00
Embankment, CIP	400	Cyd	$4.50	$1,800.00
Excavation, Earth	800	Cyd	$5.00	$4,000.00
Slope Restoration	1325	Syd	$1.50	$1,987.50
Miscellaneous	1	LS	$28,000.00	$28,000.00
			Total	**$166,162.50**

18th Avenue, *Port Sheldon Street to Rosewood Street (Photos)*

14th Avenue, *Van Buren Street to 44th Street to Port Sheldon Street*

C **D**

- Van Buren Street to 44th Street
  - Proposed Shoulder Widening for Bicyclists

- 44th Street to Port Sheldon Street
  - Existing Paved Shoulders

14th Avenue, Van Buren Street to 44th Street to Port Sheldon Street - .68 miles				
Description	Quantity	Unit	Unit Price	Item Price
HMA	300	Ton	$100.00	$30,000.00
Shoulder, 3 inch	2400	Syd	$2.00	$4,800.00
Aggregate Base, 6 inch	6000	Syd	$5.00	$30,000.00
Subbase, CIP	3000	Cyd	$8.00	$24,000.00
Embankment, CIP	600	Cyd	$4.50	$2,700.00
Excavation, Earth	2200	Cyd	$5.00	$11,000.00
Slope Restoration	4000	Syd	$1.50	$6,000.00
Miscellaneous	1	LS	$22,000.00	$22,000.00
			Total	**$130,500.00**

14th Avenue, *Van Buren Street to 44th to Port Sheldon Street (Photos)*

12th Avenue, *Port Sheldon Street to Baldwin Street*

- Port Sheldon Street to Baldwin Street
  - Existing Sidewalks (east side)
  - Existing Sidewalks (west side – north of M-121/Chicago Drive)
    - Fill in sidewalk gap between Port Sheldon and Chicago Drive
    - **Install ADA Ramps**

12th Avenue, Port Sheldon Street to Baldwin Street - 1.28 miles				
Description	Quantity	Unit	Unit Price	Item Price
Sidewalk, Conc, 4 inch	8500	Sft	$4.00	$34,000.00
Sidewalk Ramp, Conc, 6 inch	400	Sft	$7.00	$2,800.00
Detectable Warning Surface	50	Ft	$45.00	$2,250.00
Embankment, CIP	125	Cyd	$4.50	$562.50
Excavation, Earth	225	Cyd	$5.00	$1,125.00
Slope Restoration	800	Syd	$1.50	$1,200.00
Miscellaneous	1	LS	$9,000.00	$9,000.00
			Total	**$50,937.50**

Considerations:

Keep Pedestrian/Bicycle Traffic crossing M-121/Chicago Drive only on the East side

OR

Install sidewalk, crossing, pedestrian signal and pedestrian bridge on west side (approx. $200,000+) *not included in estimate*

12th Avenue, *Port Sheldon Street to Baldwin Street (Photos)*

8th Avenue, *Jackson Street to 44th Street*

C **D**

- Jackson Street to 44th Street
  - Proposed Shoulder Widening
    - Existing Pedestrian Signal at 44th

- 44th Street to Port Sheldon Street
  - Existing Sidewalks

To Do:

Check safety of railing across I-196
Check with MDOT on need for a wire woven pedestrian fence

8th Avenue, Jackson Street to 44th Street - 1.75 miles				
Description	Quantity	Unit	Unit Price	Item Price
HMA	1375	Ton	$100.00	$137,500.00
Shoulder, 3 inch	6200	Syd	$2.00	$12,400.00
Aggregate Base, 6 inch	14500	Syd	$5.00	$72,500.00
Subbase, CIP	7600	Cyd	$8.00	$60,800.00
Embankment, CIP	1500	Cyd	$4.50	$6,750.00
Excavation, Earth	5900	Cyd	$5.00	$29,500.00
Slope Restoration	10500	Syd	$1.50	$15,750.00
Miscellaneous	1	LS	$34,000.00	$34,000.00
			Total	**$369,200.00**

8th Avenue, *Jackson Street to 44th Street (Photos)*

Kenowa Avenue, *Jackson Street to 44th Street*

C **D**

- Jackson Street to Barry Street
  - Proposed Shoulder Widening for Bicyclists

- Barry Street to south of 44th Street
  - Existing Non-Motorized Trail
    - Very nice path on the west side
    - Wide Shoulders over I-196

North end of Kenowa Street to 44th Street
Existing sidewalk

Kenowa Avenue, 44th Street to Jackson Street - 2.0 miles				
Description	Quantity	Unit	Unit Price	Item Price
Clearing	10	Sta	$150.00	$1,500.00
HMA	500	Ton	$100.00	$50,000.00
Aggregate Base, 6 inch	3500	Syd	$5.00	$17,500.00
Subbase, CIP	1300	Cyd	$8.00	$10,400.00
Embankment, CIP	200	Cyd	$4.50	$900.00
Excavation, Earth	2000	Cyd	$5.00	$10,000.00
Slope Restoration	1200	Syd	$1.50	$1,800.00
Miscellaneous	1	LS	$19,000.00	$19,000.00
			Total	**$111,100.00**

Kenowa Avenue, *Jackson Street to 44th Street (Photos)*

APPENDIX A

Typicals
&
Details

A

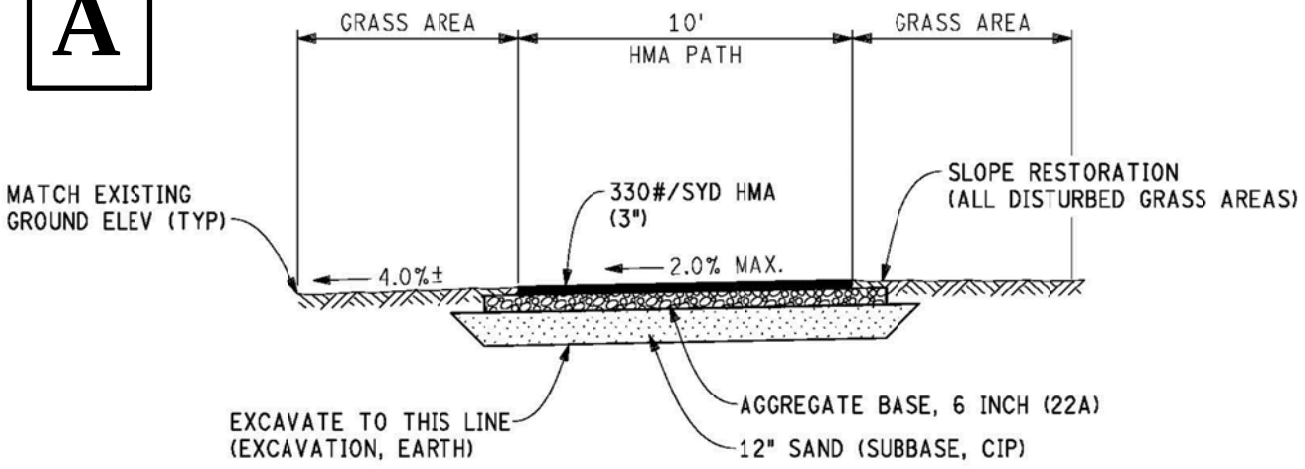

HMA PATH CROSS SECTION

B

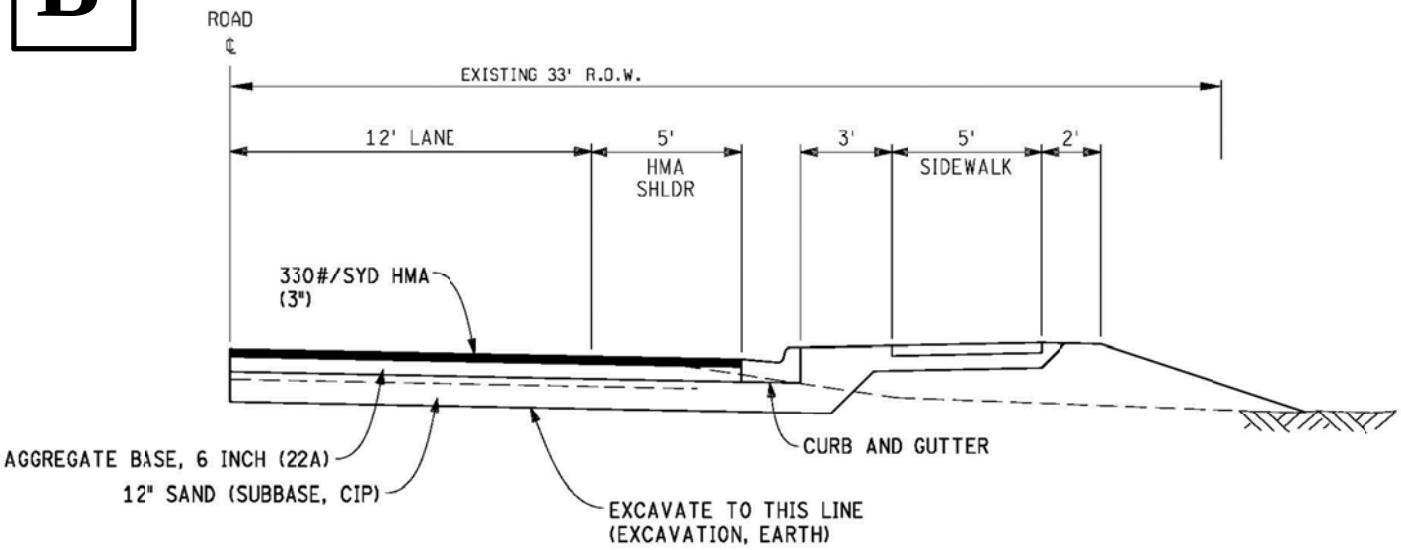

PROPOSED CONNECTOR SECTION

C

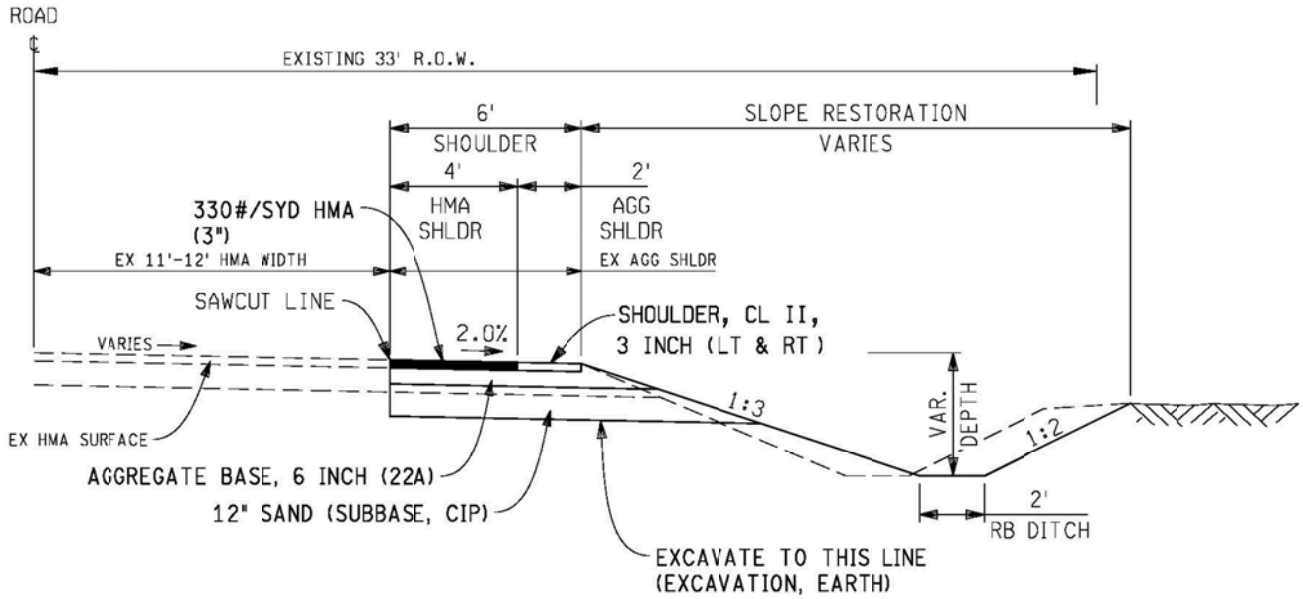

PROPOSED PAVED SHOULDER WITH DITCH

D

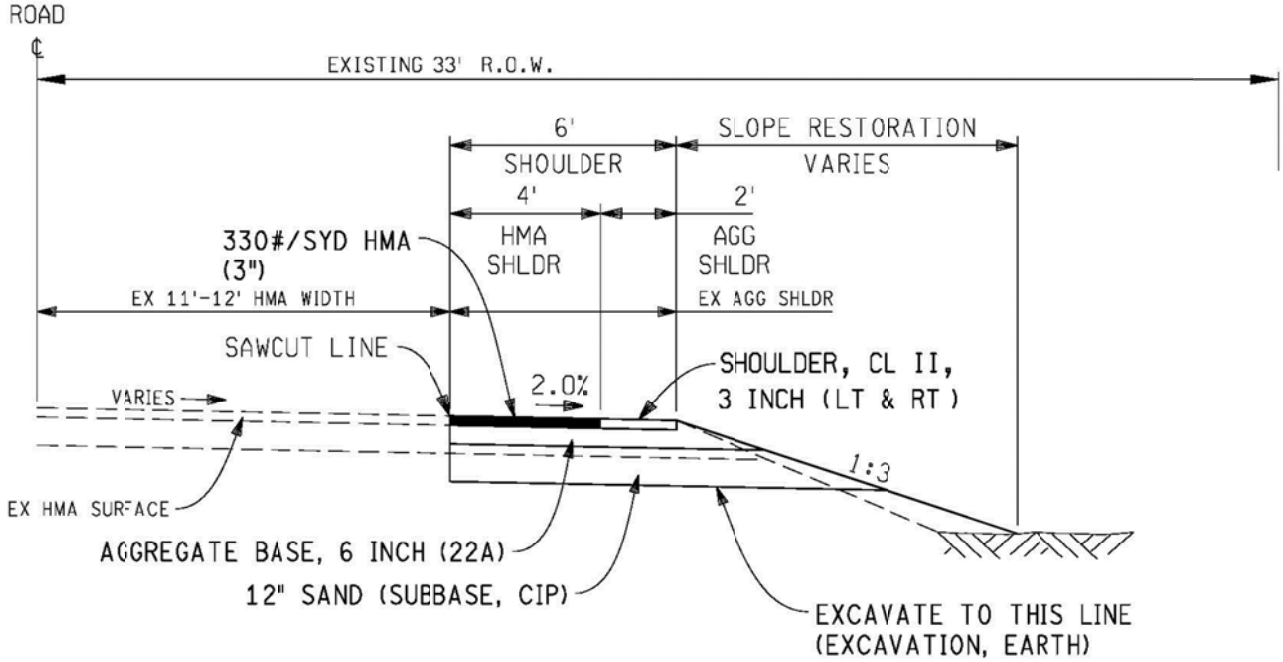

PROPOSED PAVED SHOULDER

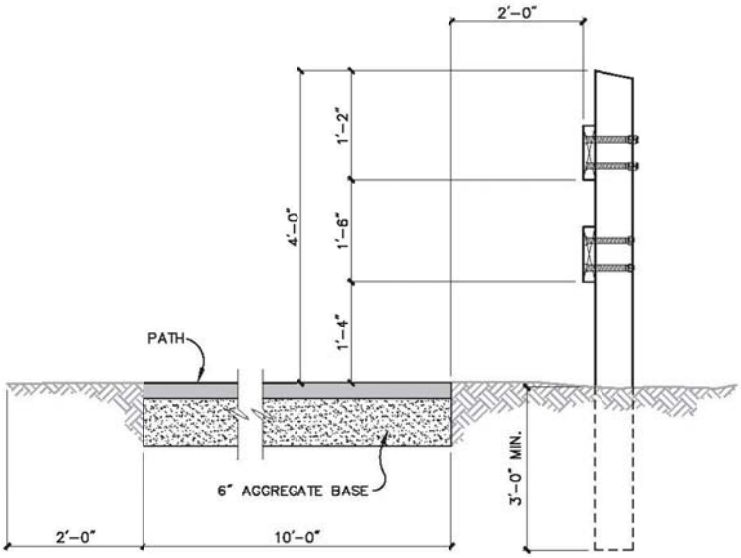

LUMBER FENCE DETAIL

SCALE : NONE

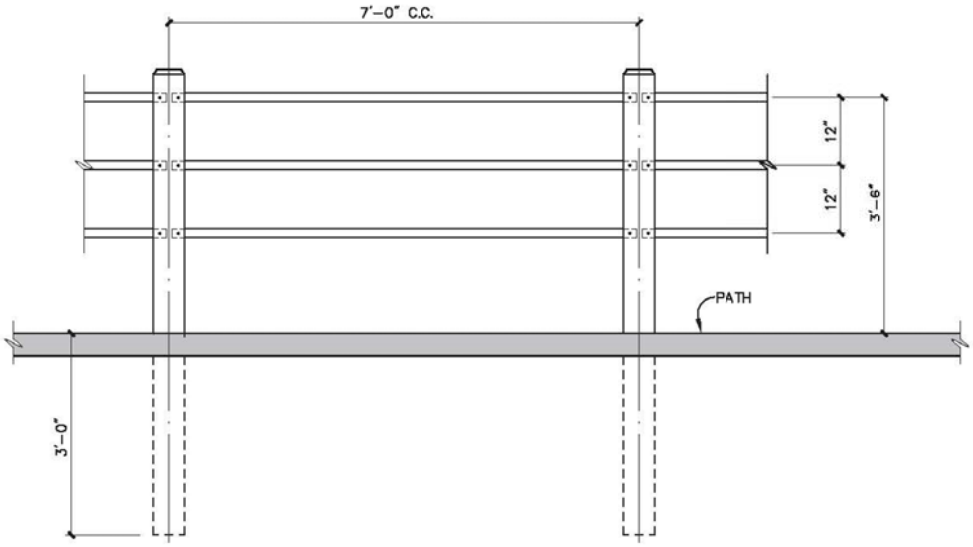

THREE RAIL FENCE DETAIL

SCALE : NONE

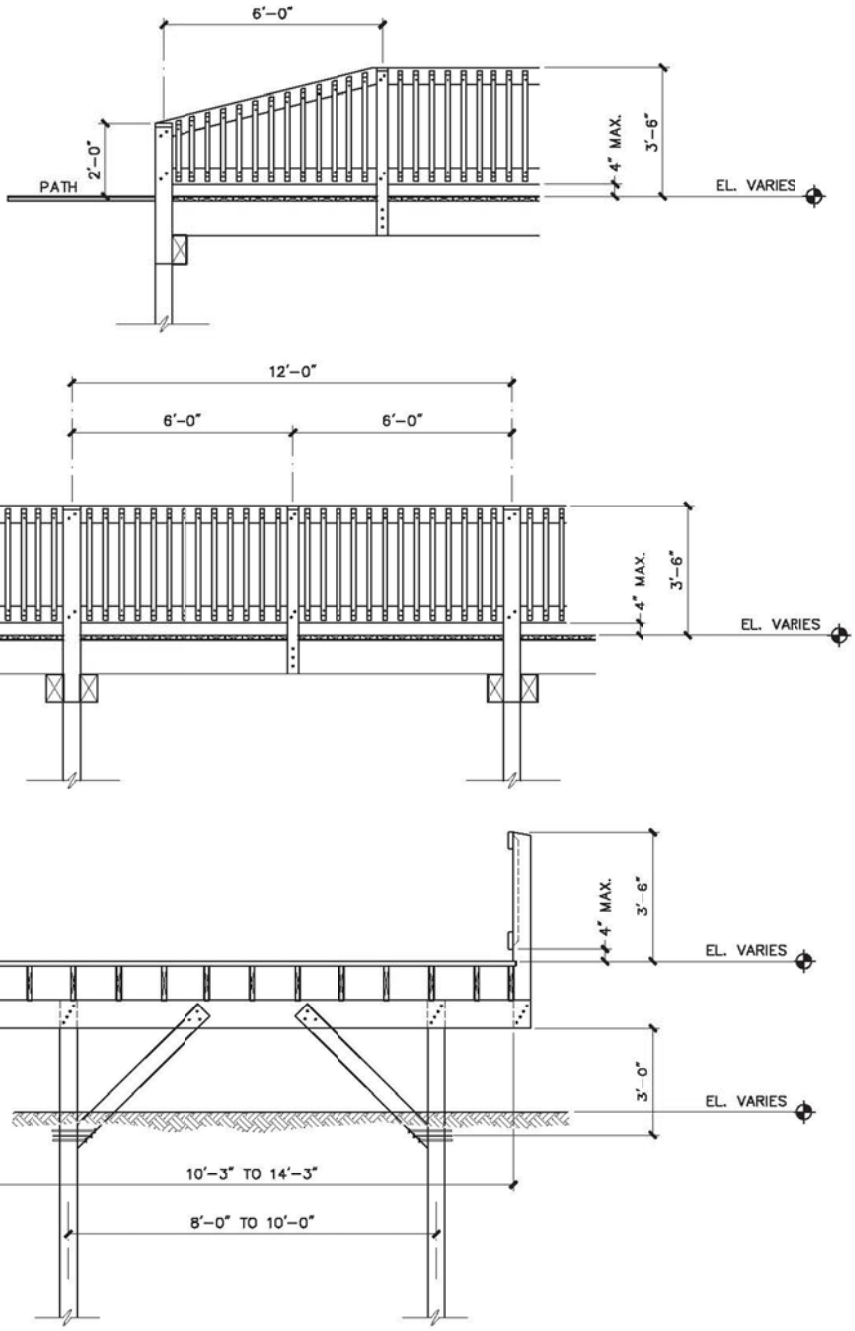

TYPICAL TREATED LUMBER BOARDWALK DETAILS

SCALE : NONE

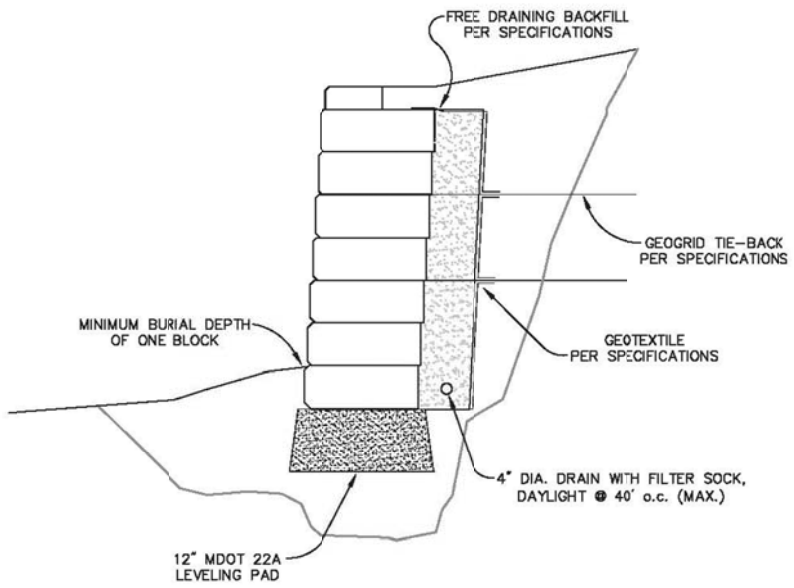

CONCRETE BLOCK RETAINING WALL

SCALE : NONE

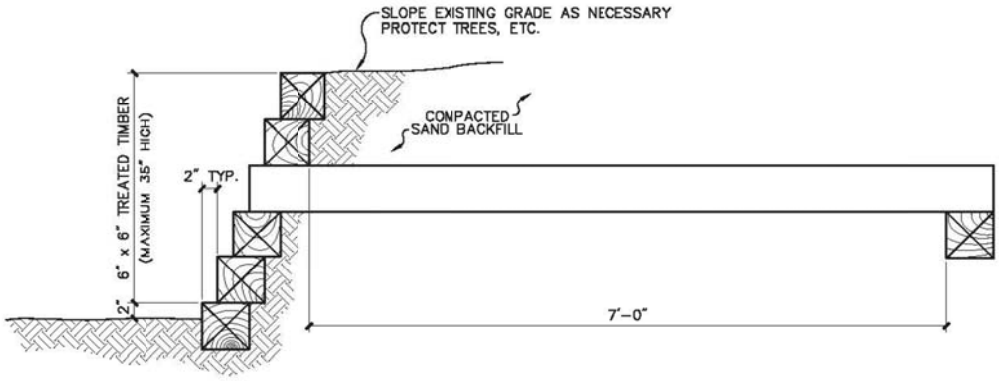

TIMBER RETAINING WALL

SCALE : NONE

APPENDIX B

Recreation Inventory

4 Recreation Inventory

In order to determine the recreational needs for Georgetown Charter Township, an analysis of the existing facilities was undertaken. The intent of the analysis is to provide a clear evaluation of the strengths and weaknesses of the existing recreational opportunities the Township has to offer its citizens. The inventory is based on information provided by Township staff and site inspections carried out by M.C. Smith and Associates as part of the planning process.

GEORGETOWN CHARTER TOWNSHIP FACILITIES

There are seven (7) Township parks, one ice arena, four (4) County Parks, a private sports complex and eleven (11) public school sites that have existing recreational facilities on approximately 1125 acres of public or quasi-public land in Georgetown Charter Township. The Township properties can be classified as follows: three neighborhood parks, three community parks and one sports complex. This classification is adapted from "Park, Recreation, Open Space and Greenway Guidelines," J. D. Mertes and J. R. Hall, 1995, as recommended by the Michigan Department of Natural Resources. A more detailed description of the various public, quasi-public and private recreation facilities follows.

An Existing Recreation Facilities map at the end of this section illustrates the location of public park/recreation areas within the Township, and an Existing Recreation Facilities matrix provides a summary of the facilities provided at each site. A

4 Recreation Inventory

In order to determine the recreational needs for Georgetown Charter Township, an analysis of the existing facilities was undertaken. The intent of the analysis is to provide a clear evaluation of the strengths and weaknesses of the existing recreational opportunities the Township has to offer its citizens. The inventory is based on information provided by Township staff and site inspections carried out by M.C. Smith and Associates as part of the planning process.

GEORGETOWN CHARTER TOWNSHIP FACILITIES

There are seven (7) Township parks, one ice arena, four (4) County Parks, a private sports complex and eleven (11) public school sites that have existing recreational facilities on approximately 1125 acres of public or quasi-public land in Georgetown Charter Township. The Township properties can be classified as follows: three neighborhood parks, three community parks and one sports complex. This classification is adapted from "Park, Recreation, Open Space and Greenway Guidelines," J. D. Mertes and J. R. Hall, 1995, as recommended by the Michigan Department of Natural Resources. A more detailed description of the various public, quasi-public and private recreation facilities follows.

An Existing Recreation Facilities map at the end of this section illustrates the location of public park/recreation areas within the Township, and an Existing Recreation Facilities matrix provides a summary of the facilities provided at each site. A

Park Accessibility Assessment is also provided at the end of this section.

Neighborhood Parks

A neighborhood park is the basic unit of the park system and typically serves a residential area of ¼ to ½ mile distance. A size of 5-10 acres is considered optimal for this type of park. The focus is on informal active and passive recreational activities, such as field games, court games, playground equipment, and picnicking. Three of the Township's recreation areas are considered to fit into this category.

Pioneer Park *(5.7 acres)*
Pioneer Park is a small neighborhood park in a residential area south of Baldwin. The park features a paved parking area, picnic shelter, playground with a small modular unit and swings, two (2) small soccer fields and a recreation ballfield.

Rosewood Park *(8.5 acres)*
Rosewood Park features a large paved parking lot, fenced playground with a high tower modular structure, a gravel trail with picnic tables on concrete pads, new play area for younger park visitors, mini splash pad, and bathroom facilities. A small triangle of the park to the north is undeveloped. Adjacent to the park, Ottawa County Drain Commission property is used for a soccer field with the large slope surrounding it popular for sledding and fun family event that involves a large slip and slide.

Woodcrest Park *(10.9 acres)*
Woodcrest Park is the Township's third neighborhood park. It has frontage on Baldwin Street but is accessed from the residential neighborhood off Boulder Bluff Drive. The park has an older paved parking area, a small fire engine themed playground and a soccer field. Woodcrest also features a small pond, which is used only for drainage purposes. The park has no connecting walkways.

Community Parks

Community-wide parks serve a broader purpose than neighborhood parks and provide a range of facilities and areas capable of supporting structured and unstructured community participation. These areas are typically between 30 and 50 acres in size and serve two or more neighborhoods and ½ to 3 mile distance. Facilities may include wooded or natural areas, picnic shelters and grills, bike or hiking trails and other semi-active and passive uses for large groups of people. They may also contain specialized recreational facilities such as swimming pools, community centers and lighted ball diamonds. Community Parks should be serviced by arterial or connector streets and should be easily accessible from throughout their service area by interconnecting trails. Currently there are three Georgetown Township parks classified within this category.

Maplewood Park *(22.3 acres)* Maplewood Park is a small community park in a residential neighborhood in the north-east of the Township. The Park is located on the north side of Maplewood Lake and features splash pad, an adjacent playground and modern restrooms/concession building. Other facilities include basketball court, two (2) tennis

courts, two (2) sand volleyball courts, picnic tables and grills and ample paved parking.

8Th Ave Community Park *(55 acres)*
This is the Township's most popular park site, with a swimming beach, a large picnic pavilion with modern restrooms, basketball court, beach volleyball, limited play equipment and a one mile loop walking trail around the lake with boardwalk and gazebo. Due to heavy park use, there is an entrance fee for non-residents during summer weekends. Security personnel and park attendants are employed to monitor use.

Rush Creek Park *(40 acres)*
Rush Creek Park is one of the Township's largest recreation properties. It is accessed through a residential neighborhood on the west side of the Township. The park is equipped with a picnic shelters, two (2) playground areas, a newly resurfaced tennis court, a ball field, two (2) soccer fields and bituminous paved parking. The facilities are surrounded by a natural area containing two Creeks, which connect into Rush Creek to the south of the property, and a network of informal pathways.

Sports Complex

A sports complex is a park that consolidates heavily programmed athletic fields and associated facilities, strategically located to best serve the community. Site size is determined by demand, with a minimum of 25 acres and 40 to 80 acres considered an optimal size.

Port Sheldon Sports Complex *(28.9 acres)*
This site is owned by Ottawa County and is located south of Port Sheldon, just outside the Township boundary. However, this sports complex is managed by Georgetown Charter Township, in collaboration with A.Y.S.O., Hudsonville Little League. The site provides two (2) Little League Fields, three (3) softball fields and eight (8) soccer fields. Support facilities are limited to paved parking, with no modern restroom building or lighting.

28th Ave Soccer Fields *(9.5 acres)*
This property is earmarked for cemetery expansion but is currently used for soccer, with eight (8) fields maintained by Chicago Fire Juniors. This is not dedicated park land but can be expected to continue to be available for recreational use for the next twenty years. A modern restroom/concession building is on site.

Special Use Facilities

Special use facilities have specialized or single-purpose activities such as golf courses, nature centers, boat launches, arenas, outdoor theaters or stadiums. Special Use sites are listed below:

Georgetown Ice Arena, 8500 48th Avenue
(11.5 acres)
The Georgetown Charter Township community ice rink was dedicated in 2004. The Georgetown Ice Center boasts two sheets of NHL size ice (85' x 200'), heated seating for 900 and 400, skate rental, locker rental, team locker rooms, video arcade and a privately operated pro-shop and concession area. The facility is utilized by Grand Valley State University, Jenison High School Hockey, and Hudsonville High School Hockey and the Grand Valley Amateur Hockey Association (GVAHA).

Programs offered include Learn-to-Skate and Learn-to-Play, Youth Scrimmage League, GVAHA Hockey Programs (mite – midget), Hockey Camps/Skill Clinics, Adult League Hockey, Public Skating and Drop-In Hockey, Freestyle Skating and Meeting/Party Room Rentals.

REPORT OF CANINE INVESTIGATION OF HUMAN WASTEWATER CONTAMINATION

Maplewood Lake, Jenison, MI

Prepared For: Georgetown Township, MI
Prepared By: Environmental Canine Services LLC
Report Date: August 1, 2016

Introduction: Canine Source Tracking

Environmental Canine Services LLC (ECS) uses scent trained canines to identify and source track human wastewater contamination in stormwater systems and surface waters. They have been nationally recognized as a useful rapid screening tool for human sewage bacterial contamination and utilized in over 50 illicit discharge field investigation projects in 13 different states since the company began in 2009.

Human wastewater components ECS canines can detect include sewage, detergents, and fats/oils/grease. The canines will alert to the presence of human wastewater by providing a trained behavior, such as a sit, down, or a bark, when smelling containers of collected water samples or at field investigation sites, such as at outfalls, stormwater manholes or catch basins, drains, creeks, rivers, or shorelines. This rapid detection can lead to immediate source tracking in the field and provide valuable information for future monitoring and investigations. Combining the canine results with concurrent and/or historical bacterial, surfactant, and/or other testing results for sites investigated provides further information on the type and significance of the contamination.

Field Investigation Summary

On July 18, 2016, ECS President Karen Reynolds and her canine Sable and Canine Handler Dan Ringel and his canine Abbey worked with Rod Weersing from Georgetown Township, MI to conduct field investigations and source tracking of possible human wastewater contamination of Maplewood Lake. Also accompanying ECS personnel and Mr. Weersing, to observe the process of how canine field investigations are conducted, were Dr. Randall DeJong and undergraduate student Harry Ervin from the Biology Department at Calvin College.

The investigations began by collecting water samples at three locations along the north side of the lake where E. coli testing is conducted on a regular basis. The samples were scent tested by

both ECS canines. Canine Sable alerted to the presence of human wastewater in the sample from the northwest side of the lake, directly downhill of two houses at the end of Elmwood Drive. Investigation of the park property along the back fences of those houses resulted in Sable alerting at a large patch of grass that was greener than the surrounding grass, next to the back yard fence of the house at the end of Elmwood Drive and showing interest in scent in the air coming from the back yard of the house. Both canines alerted on the samples collected from the creek outfalling to the lake at the northwest side of the lake and also at next to the dock towards the northeast side of the lake.

The two stormwater outfalls along the east side of the lake and the manholes and catch basins along 12th Avenue associated with those stormwater systems were investigated. Both canines alerted at the outfall on the northeast side of the lake. An upstream investigation of the manholes and catch basins in this stormwater system resulted in one canine alerting on the manhole directly upstream of the outfall, one canine alerting on two of the catch basins directly upstream of the outfall, and both canines alerting on the catch basin at the top of the stormwater system, near the intersection of 12th Avenue and the entrance to Maplewood Park. It was noted that the sewer lift station is located near this site.

One canine alerted at the stormwater outfall on the southeast side of the lake and to the catch basin draining to it. Suds were visible inside the catch basin, indicating a possible discharge of detergents to that basin. It was noted that the resident of the house across the street from the outfall and catch basin was power washing carpets in his driveway. No suds were visible on the driveway, and the resident told ECS personnel that no detergents were being used. The suds may have originated from car washing or a similar activity using detergents at another residence along the street that flowed into the catch basins, which was the probable cause of the canine alert.

The canine teams investigated the entire shoreline of the south side of the lake, and neither canine alerted along the shore. In a fenced area overgrown with vegetation next to the last house on the southwest shore, a water sample was taken directly from the flow from the concrete outfall above the lake. The outfall flow was very heavy, and both canines alerted on the sample taken from it. It is believed that the outfall drains an area of housing on the hill above the lake on the southwest side.

The final investigations were conducted at and near the farm on the northwest side of the lake in order to access upstream of the creek outfall to the lake in that area, which both canines alerted on earlier in the day. Both canines alerted on water samples taken from the creek at several locations upstream along the farm and its fields. An old manhole structure with a crumbling concrete foundation was found near the southwest side of the farm house, across the road from and close to the creek. Both canines checked the structure, and one of the canines alerted. Mr. Weersing informed ECS after the investigation was completed that the manhole structure is from a stormwater system that runs beside the farm house.

The canine alerts on the creek upstream past the farm house became hard to access for further investigation on foot. It was noted on a map of the area that the creek appeared to either end or cross the road farther upstream on Bauer Road, just east of 20th Avenue, and that a large housing addition was located along the northwest side of the creek in that area. The investigation teams drove to the area and found that the creek was dry at Bauer Road and appeared to end there on the south side. Canine Sable investigated the dry creek area near the road and alerted.

A spreadsheet of the canine field investigation results is presented on page 5 and a Google Earth image of the results is presented on page 6.

Key Findings and Recommendations for Follow Up

The following are key findings of the canine field investigations and recommendations for follow up to further source track human wastewater contamination discharges into Maplewood Lake:

Key Findings:

1. There is a strong indication of contamination of the creek that outfalls to the lake on the northwest side of the lake. Some possible sources of contamination may be:
    a. The farm house near the outfall to the lake. The house may have a faulty septic system or a connection to a sewer system that is leaking.
    b. The stormwater system along the west side of the farm house. Due to the apparent old age and crumbling condition of the manhole structure, the stormwater system itself may also be old and cracking. If any sewer lines run near the stormwater system and are leaking or there is a nearby faulty septic system, the stormwater system may be conveying some of the leaking sewage to an outfall at the creek.
    c. The housing addition along the northwest side of the creek, south of Bauer Road and east of 20th Avenue. There may be sewer line leaks and/or faulty septic systems in this area.
2. There is a strong indication of contamination of the stormwater outfall to the lake on the south side of the lake, which was flowing heavily during dry weather. This outfall

may be draining a large housing area that has a leaking sewer system and/or faulty septic systems.

3. There is the possibility of a faulty septic system at either the house at the west end of Elmwood Drive and/or the house next to it to the southeast, which is flowing downhill to the lake.
4. There is the possibility that the stormwater outfall on the northeast side of the lake is being contaminated by leaks from sanitary sewer lines nearby and/or upstream that flow through the ground and enter the stormwater system.
5. Either the water current from the contaminated creek outfall on the northwest side of the lake is carrying the contamination along the north shore to the dock area, or there is a possibility that the sewer system at the bathrooms at Maplewood Park is leaking and flowing downhill into that area.

Recommendations:

- Determine which homes or building structures in the key areas identified above that are near or uphill of the lake are connected to a sewer system and which are connected to a septic system.
    - If all homes and buildings are on city water, the ones that are receiving sewer bills are on sewer and the ones not receiving sewer bills should be on septic.
    - If some homes and buildings have water wells, the water well drilling records may contain information about the location and age of a septic system due to its proximity to the water well.
- If a house or building is on a septic system, this needs to be investigated to find out the age, size, and use of the system and how it has been maintained. Any system older than 20 years is suspect, and even less than that if it has not been maintained. An examination by a professional to determine whether the system is failing and needs to be repaired or replaced may be needed. The Health Department may be able to assist with this.
- Investigate the stormwater system on the west side of the farm house to determine if there are cracks, and investigate any nearby sewer lines and septic systems for leaks and failures.
- The sewer systems associated with the key areas may need to be examined for leaks by video camera and/or the houses or buildings dye tested to find problems.
- Any lift stations and the pipes connected to them nearby the key areas should be examined for problems that may be causing leaking sewage.
- The sewer systems for the bathrooms at Maplewood Lake may need to be examined for leaks by video camera and/or through dye testing to find problems.

ENVIRONMENTAL CANINE SERVICES LLC

FIELD INVESTIGATION RESULTS FOR MAPLEWOOD LAKE, JENISON, MI

Date: July 18, 2016

Canine 1: Abbey **Canine 2: Sable**

Canine Results:

- **Two canine alerts to presence of human wastewater**
- **One canine alert to presence of human wastewater**
- **No canine alerts to presence of human wastewater**

#	Site ID, Field Blank, or Sewage Sample	Site Type*	Location Description	GPS N	GPS W	Canine 1 Response	Canine 2 Response	Comments
1	N1	GS-L	Sample from NW side of lake	42.915905	-85.815839	-	+	
2	N2	GS-C	Sample from creek outfalling into lake near site 1			+	+	
3	D	GS-L	Sample from next to dock	42.914938	-85.81348	+	+	
4		O	Park ground NW of park, behind house on corner	42.916389	-85.815601	-	+	Alert on the ground near house fence. Green patch on ground. Ground slopes downhill from house to lake near where sample N1 was taken.
5		OF	Stormwater system outfall E side of lake, W side of 12th Ave, across street from church entrance			+	+	
6		CB	Catch basin on E side of 12th Ave across street from site 5			+	-	
7		CB	Catch basin on W side of 12th Ave near site 5			-	-	
8		MH	Stormwater manhole in grass near outfall at site 5			+	-	Standing water in MH. Outfalls to lake.
9		MH	Stormwater manhole in center of street between sites 6 & 7			-	+	
10		GS-L	Sample from lake S of outfall at site 5			-	-	
11		CB	Catch basin to stormwater system upstream of manhole at site 8	42.91554	-85.811893	+	+	Top of the stormwater line. Lift station is very close upstream.
12		OF	Stormwater outfall into lake near S end of 12th Ave	42.911738	-85.811813	-	+	
13		CB	Catch basin draining to outfall at site 12			-	+	Suds in water in catch basin. Resident across street power washing rugs but denied using any detergents.
14		GS-OF	Sample from water flowing from stormwater outfall structure	42.910976	-85.814094	+	+	Very heavy stormwater flow in dry weather
15		GS-C	Sample from creek at farm upstream of site 2 outfall	42.916255	-85.817496	+	+	
16		MH	Manhole close to creek at farm, near site 15	42.91638	-85.81753	+	-	Very old manhole structure with crumbling concrete and holes in ground for K9s to sniff.
17		GS-C	Sample from creek upstream of site 15	42.916509	-85.818463	+	+	
18		C	End of creek at Bauer Rd, upstream of site 17			NA	+	Dry creek bed. Houses along creek here and all the way downstream almost to site 17. Septic systems?

***Site Type Codes: OF=Outfall MH=Manhole CB=Catch Basin D=Drain/Ditch ST=Stream/Trib R=River L=Lake SH=Shoreline O=Other (Describe) FB=Field Blank**
GS=Grab sample, followed by Site Type code.

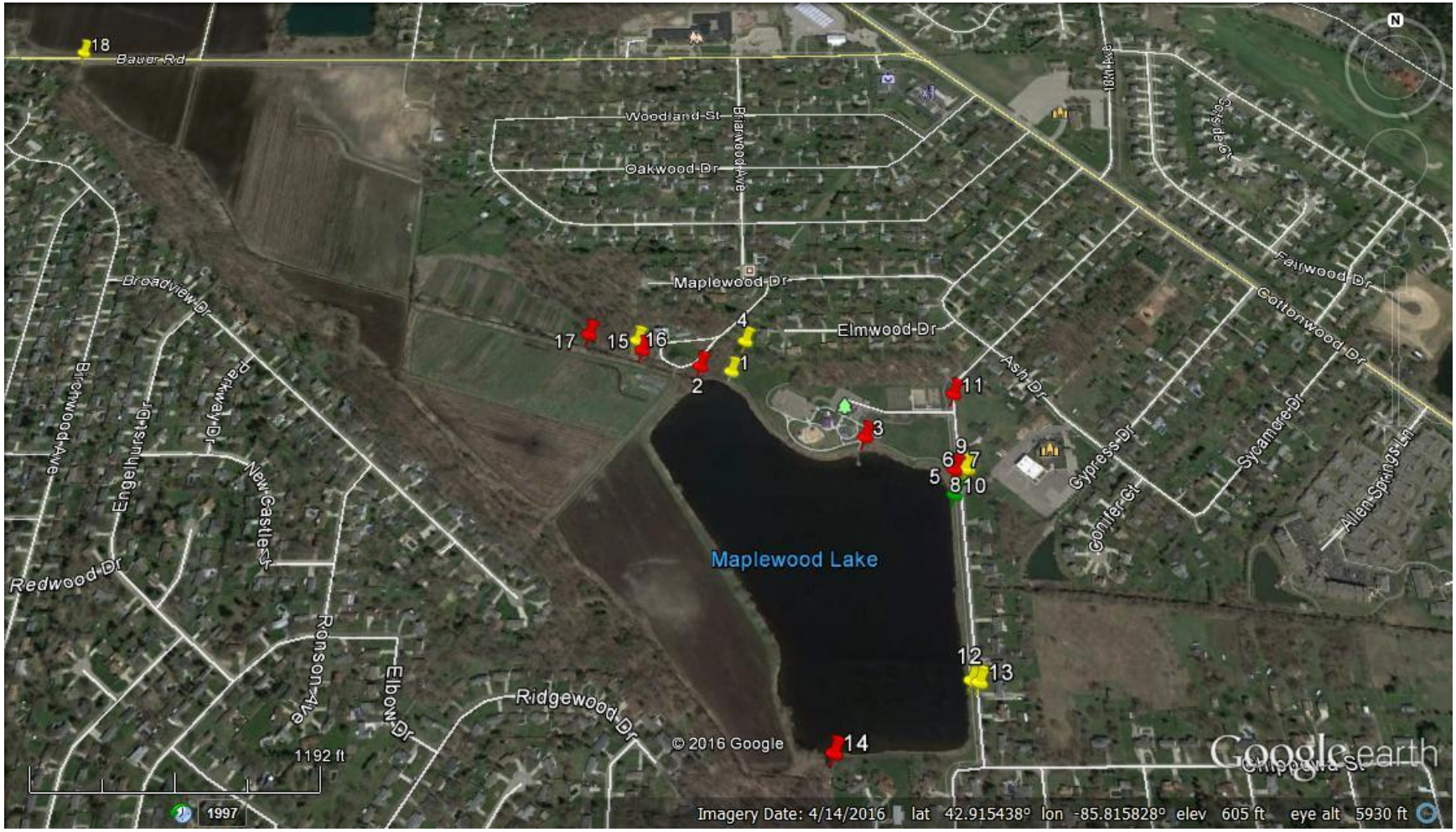
18
Bauer Rd
Woodland St
Oakwood Dr
Briarwood Ave
Maplewood Dr
Elmwood Dr
Broadview Dr
17
15
16
4
1
2
11
3
9
6
7
5
8
10
Ash Dr
Cypress Dr
Conifer Ct
Sycamore Dr
Allen Springs Ln
Fairwood Dr
Cottonwood Dr
Maplewood Lake
Redwood Dr
Engelhurst Dr
Parkway Dr
New Castle St
Ronson Ave
Elbow Dr
Ridgewood Dr
12
13
14
1192 ft
© 2016 Google
Google earth
1997
Imagery Date: 4/14/2016 lat 42.915438° lon -85.815828° elev 605 ft eye alt 5930 ft

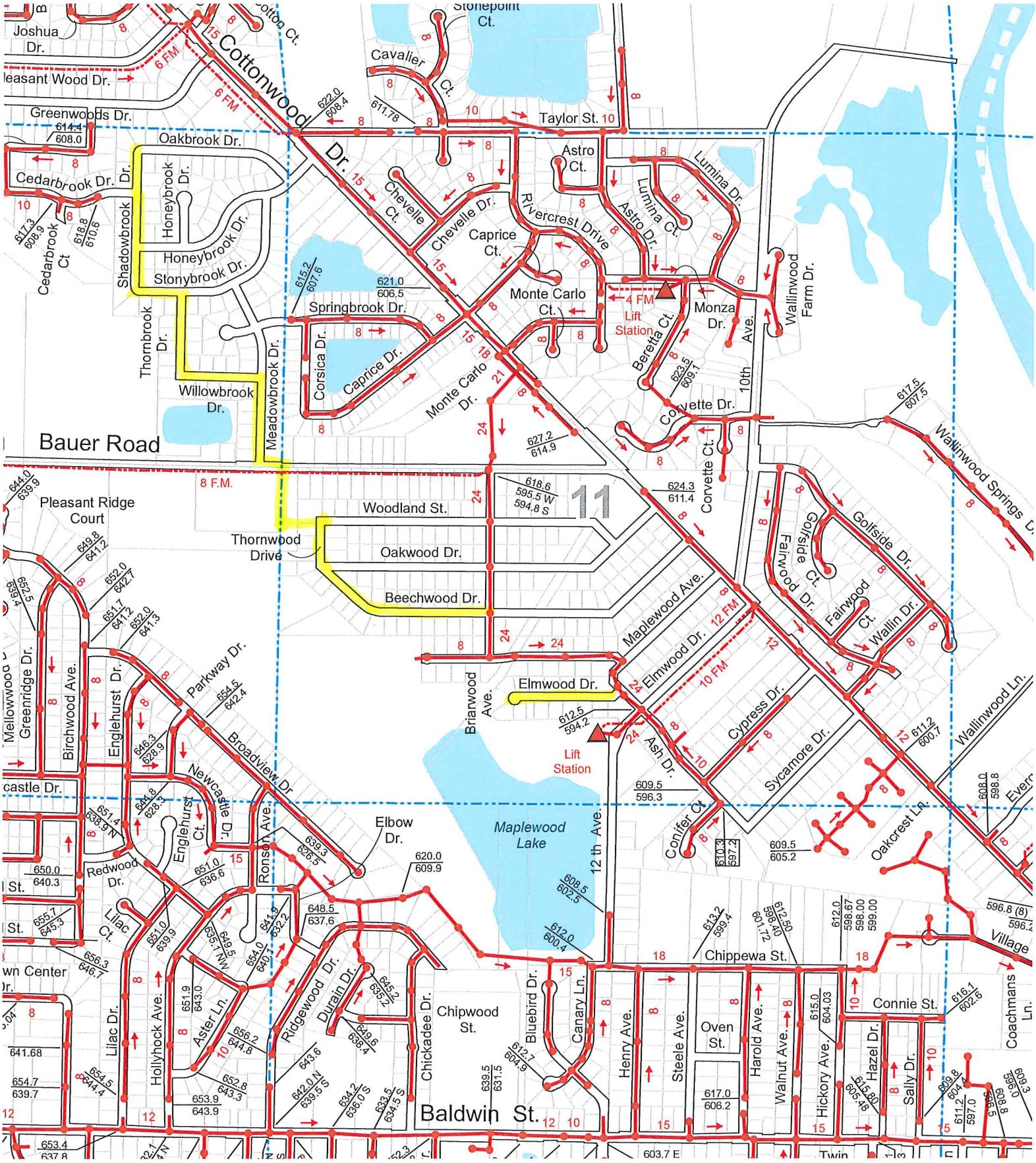
Cottonwood Dr.
Joshua Dr.
Pleasant Wood Dr.
Greenwoods Dr.
Oakbrook Dr.
Cedarbrook Dr.
Cedarbrook Ct
Shadowbrook Dr.
Honeybrook Dr.
Honeybrook Dr.
Stonybrook Dr.
Thornbrook Dr.
Willowbrook Dr.
Meadowbrook Dr.
Springbrook Dr.
Corsica Dr.
Caprice Dr.
Chevelle Ct.
Chevelle Dr.
Cavalier Ct.
Stonepoint Ct.
Taylor St.
Rivercrest Drive
Caprice Ct.
Monte Carlo Ct.
Monte Carlo Dr.
Astro Ct.
Astro Dr.
Lumina Ct.
Lumina Dr.
Monza Dr.
Beretta Ct.
Corvette Dr.
Corvette Ct.
10th Ave.
Wallinwood Farm Dr.
Wallinwood Springs Dr.
Wallinwood Ln.
Golfside Dr.
Golfside Ct.
Fairwood Dr.
Fairwood Ct.
Wallin Dr.
Bauer Road
Pleasant Ridge Court
Thornwood Drive
Woodland St.
Oakwood Dr.
Beechwood Dr.
Maplewood Ave.
Elmwood Dr.
Elmwood Dr.
Briarwood Ave.
Cypress Dr.
Sycamore Dr.
Ash Dr.
Conifer Ct.
Oakcrest Ln.
Lift Station
Lift Station
Maplewood Lake
12 th Ave.
Mellowwood Dr.
Greenridge Dr.
Birchwood Ave.
Englehurst Dr.
Parkway Dr.
Broadview Dr.
Newcastle Dr.
Englehurst Ct.
Ronson Ave.
Elbow Dr.
Redwood Dr.
Lilac Ct.
Lilac Dr.
Hollyhock Ave.
Aster Ln.
Ridgewood Dr.
Durain Dr.
Chickadee Dr.
Chipwood St.
Bluebird Dr.
Canary Ln.
Henry Ave.
Steele Ave.
Oven St.
Harold Ave.
Walnut Ave.
Hickory Ave.
Hazel Dr.
Sally Dr.
Chippewa St.
Connie St.
Coachmans Ln.
Baldwin St.
Village
11
8 F.M.
6 FM
4 FM
10 FM
12 FM

Georgetown Township

Top 10 List for Sidewalks & Non-motorized Paths

1. Kenowa Avenue – Main Street to Suncrest Court
2. 8th Avenue – 44th Street to Jackson Street
3. 14th Avenue – South of 44th Street
4. 36th Avenue – City of Hudsonville to Fillmore Street
5. 40th Avenue – Port Sheldon to existing
6. 42nd Avenue
7. Port Sheldon – 40th Avenue to 48th Avenue
8. Bauer Road – 24th Avenue to 48th Avenue
9. Cottonwood Drive – Bauer Road to Fillmore Street
10. Fillmore Street – Cottonwood to 24th Avenue

Sidewalks & Non-motorized Paths in Process

22nd Avenue – VanBuren Street to South Border
Kenowa Avenue – Barry Street to Jackson Street

APPLICATION FOR SIDEWALK WAIVER

Georgetown Charter Township
1515 Baldwin St, P.O. Box 769
Jenison, MI 49429
616-457-2340

revised: January 26, 2009

APPLICANT INFORMATION

COMPANY NAME: Inner-Space Storage Co.	PHONE: 616-292-4690
APPLICANT NAME: Todd Ponstein	
ADDRESS: 6601 Wilshere	CITY / STATE / ZIP: Jenison, MI 49428

PROPERTY INFORMATION

COMPANY NAME: Georgetown Ind. Center No. 2	PHONE: 616-538-9460
OWNER / AGENT NAME: Todd Ponstein	TITLE: Owner
ADDRESS: 3083 Washington Ave; Ste 2	CITY / STATE / ZIP: Grandville, MI 49418
PARCEL NUMBER: 70-14-22-364-007	ZONING DISTRICT: NS-PUD to be rezoned to Industrial PUD
USE OF THE PROPERTY: Self Storage	

WAIVER INFORMATION

SECTION 6 OF ORDINANCE 2000-01 STATES "THE TOWNSHIP MAY WAIVE THE SIDEWALK REQUIREMENT IF, IN THE OPINION OF THE TOWNSHIP BOARD, REQUIREMENT WOULD RESULT IN UNFAIRNESS OR UNREASONABLE HARDSHIP." PLEASE PROVIDE INFORMATION AS TO HOW YOUR REQUEST MEETS THIS STIPULATION OR INFORMATION AS TO WHY THIS ORDINANCE SHOULD BE WAIVED FOR YOUR SITUATION. THE APPLICANT MAY PROVIDE ADDITIONAL EVIDENCE TO SUPPORT THE REQUEST, SUCH AS PICTURES OR SITE PLANS.

Waiver of sidewalks would be consistent with other existing businesses on Center Industrial Dr.

APPLICANT SIGNATURE

IT IS THE APPLICANT'S RESPONSIBILITY TO MEET THE REQUIREMENTS OF THE TOWNSHIP ZONING ORDINANCE IN ALL RESPECTS AND TO PROVIDE THE NECESSARY INFORMATION TO THE TOWNSHIP FOR APPROVAL. COPIES OF THE ORDINANCE MAY BE OBTAINED FROM THE GEORGETOWN TOWNSHIP WEBSITE AT WWW.GEORGETOWN-MI.GOV. THE APPLICATION SHALL BE ACCOMANIED BY A FEE AS ESTABLISHED BY THE TOWNSHIP BOARD. THE REQUEST WILL BE PRESENTED TO THE UTILITIES/FACILITIES COMMITTEE FOR A RECOMMENDATION PRIOR TO APPEARING ON THE GEORGETOWN TOWNSHIP BOARD AGENDA. BY SIGNING I ACKNOWLEDGE THERE ARE NO REFUNDS FOR ANY REASONS.

APPLICANT SIGNATURE: X	DATE: 8-29-16

FOR OFFICE USE ONLY

DATE OF TOWNSHIP BOARD MEETING:	APPROVED/DENIED:	ANY CONDITIONS:

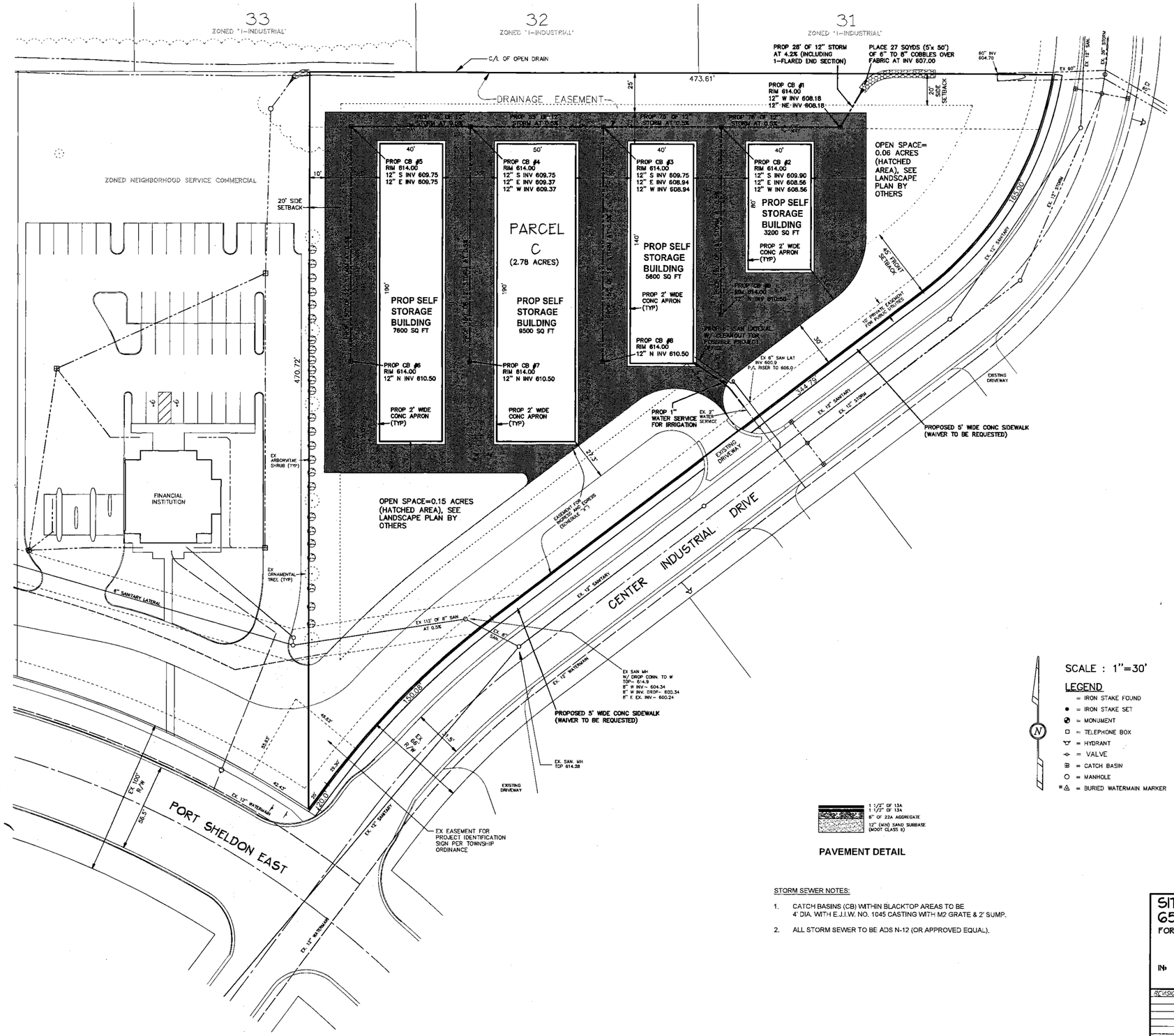

GENERAL NOTES:

1. PARCEL 70-14-22-364-007 (2.78 ACRES), DESCRIBED AS THAT PART OF LOT 29, GEORGETOWN INDUSTRIAL CENTER NO. 2, PART OF THE SW 1/4, SECTION 22, T6N, R13W, GEORGETOWN TOWNSHIP, OTTAWA COUNTY, MICHIGAN, DESCRIBED AS: BEGINNING AT THE NE CORNER OF SAID LOT 29; THENCE SOUTHWESTERLY 165.00 FEET ALONG THE NORTHWESTERLY LINE OF CENTER INDUSTRIAL DRIVE (66 FEET WIDE) ON A 217.0 FOOT RADIUS CURVE TO THE RIGHT, THE CHORD OF WHICH BEARS S30°47'01"W 161.06 FEET; THENCE S52°34'00"W 344.79 FEET ALONG SAID NORTHWESTERLY LINE; THENCE SOUTHWESTERLY 150.08 FEET ALONG SAID NORTHWESTERLY LINE ON A 533.0 FOOT RADIUS CURVE TO THE LEFT, THE CHORD OF WHICH BEARS S44°30'00"W 149.58 FEET, THENCE S36°26'00"W 20.00 FEET ALONG SAID NORTHWESTERLY LINE; THENCE N00°05'00"W 470.72 FEET; THENCE N90°00'00"E 473.61 FEET ALONG THE NORTH LINE OF SAID LOT 29 TO THE PLACE OF BEGINNING.
2. CURRENT ZONING : NS (PUD) & IS PROPOSED TO BE REZONED TO I-INDUSTRIAL (PUD).
3. NO OUTDOOR STORAGE WILL BE ALLOWED ON THIS SITE.
4. NO BUSINESSES WILL BE ALLOWED TO OPERATE OUT OF THE STORAGE BUILDINGS.
5. DISTRICT REGULATIONS :

	REQUIRED	PROPOSED
FRONT	= 45'	= 45'
SIDE	= 20'	= 20'
REAR	= 40'	= N/A

6. OPEN SPACE CALCULATION :
   TOTAL SITE = 2.78 ACRES
   OPEN SPACE SHOWN = 0.21 ACRES
   0.21 / 2.78 = 7.5%
7. THIS PROPERTY IS NOT INFLUENCED BY A FLOOD PLAIN.
8. ALL SIGNAGE SHALL MEET TOWNSHIP ORDINANCE
9. LIGHT POLES SHALL NOT EXCEED 25' IN HEIGHT AND LIGHTING FIXTURES SHALL BE CUT OFF TYPE SO AS NOT TO SHED LIGHT ON ADJACENT PROPERTIES.

SCALE : 1"=30'

LEGEND
- = IRON STAKE FOUND
- = IRON STAKE SET
- = MONUMENT
- = TELEPHONE BOX
- = HYDRANT
- = VALVE
- = CATCH BASIN
- = MANHOLE
- = BURIED WATERMAIN MARKER

1 1/2" OF 13A
1 1/2" OF 13A
6" OF 22A AGGREGATE
12" (MIN) SAND SUBBASE (MDOT CLASS II)

PAVEMENT DETAIL

STORM SEWER NOTES:

1. CATCH BASINS (CB) WITHIN BLACKTOP AREAS TO BE 4' DIA. WITH E.J.I.W. NO. 1045 CASTING WITH M2 GRATE & 2' SUMP.
2. ALL STORM SEWER TO BE ADS N-12 (OR APPROVED EQUAL).

STATE OF MICHIGAN
DOUGLAS JAY STALSONBURG
ENGINEER
No. 23814
LICENSED PROFESSIONAL ENGINEER

811
Know what's below.
Call before you dig.

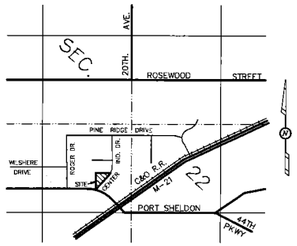

LOCATION MAP

SITE LAYOUT + UTILITY PLAN
6555 CENTER INDUSTRIAL DRIVE
FOR: TODD PONSTEIN
6601 WILSHERE
JENISON, MI 49428

IN: PART OF THE SW 1/4 OF SECTION 22, T6N, R13W, GEORGETOWN TOWNSHIP, OTTAWA COUNTY, MICHIGAN.

REVISIONS:

exxel engineering, inc.
planners · engineers · surveyors
5252 Clyde Park, S.W. • Grand Rapids, MI 49509
Phone: (616) 531-3660 Fax: (616) 531-2121
www.exxelengineering.com

DRAWN BY: MK	PROJ. ENG.: DJS	SHEET
APPROVED BY: DJS	PROJ. SURV.: .	1 of 2
FILE NO: 972762E	DATE: 07-28-16	

Excerpt of the June 28, 2004 Township Board minutes:

#040628-10 - Eliminate sidewalk/bike path requirement for streets located in the Industrial Park

Moved by Jim Holtvluwer, seconded by Daniel Carlton, to grant a waiver for streets stipulated in orange on the attachment (#040628-10A), including all or portions of the following streets that are located in the Industrial Park:

1. Pine Ridge Ct.,
2. Center Industrial Ct.,
3. Wilshere Dr.,
4. Marcan,
5. Port Sheldon Ct.,
6. South Center Industrial Dr.

Note: As recommended by the Utilities/Facilities Committee

MOTION CARRIED.
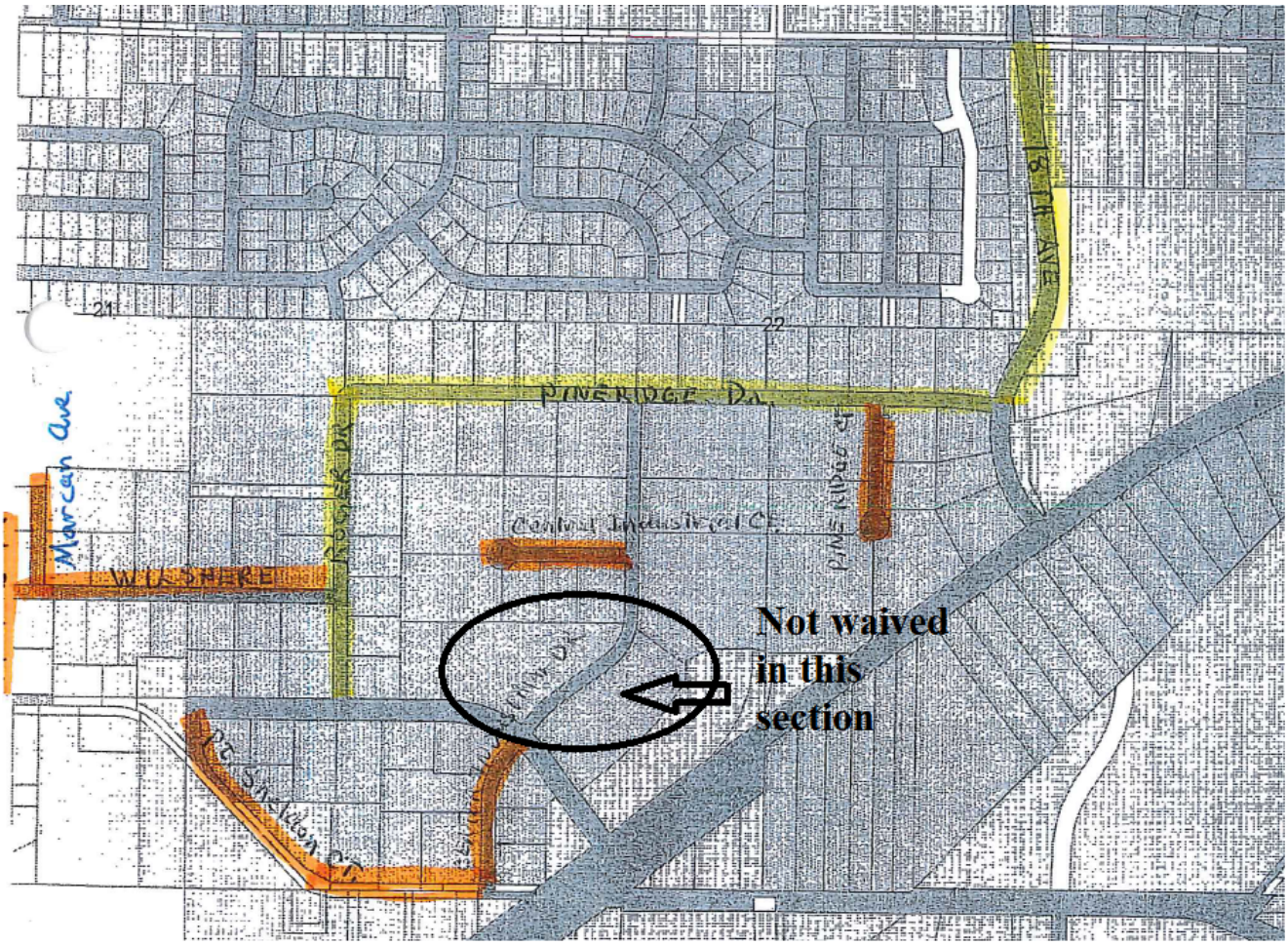
Attachment: 040628-10A (note that the sidewalk requirement is not waived for the subject site):